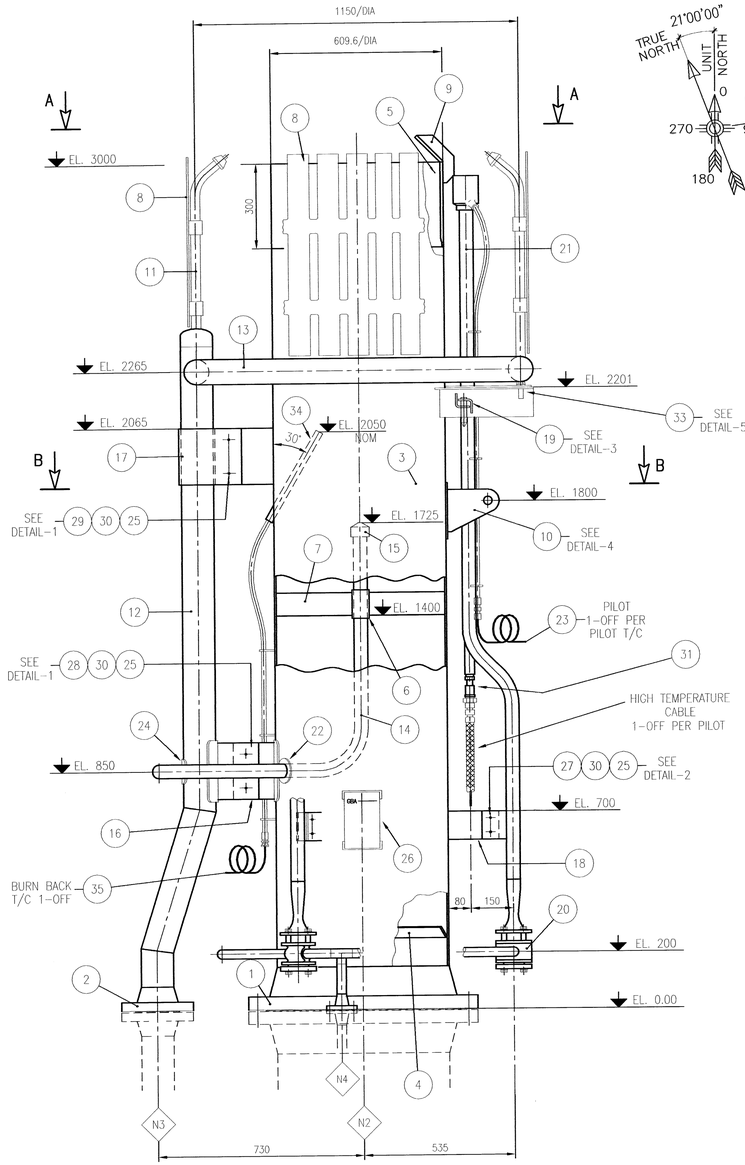

TYPICAL ELEVATION

FOR TRUE ORIENTATION SEE PLAN VIEWS

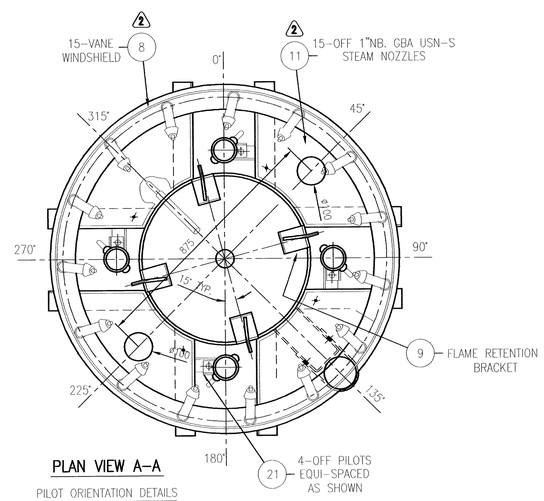

PLAN VIEW A-A

PILOT ORIENTATION DETAILS

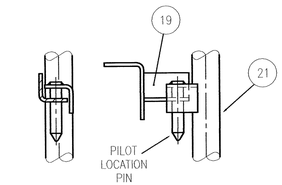

DETAIL-3 (1:5)

PILOT GUIDE BRACKET

LIFT PILOT TO DISENGAGE PIN

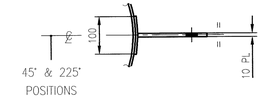

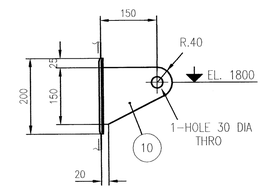

DETAIL-4 (1:7.5)

LIFTING LUG DETAIL

2-OFF REQUIRED

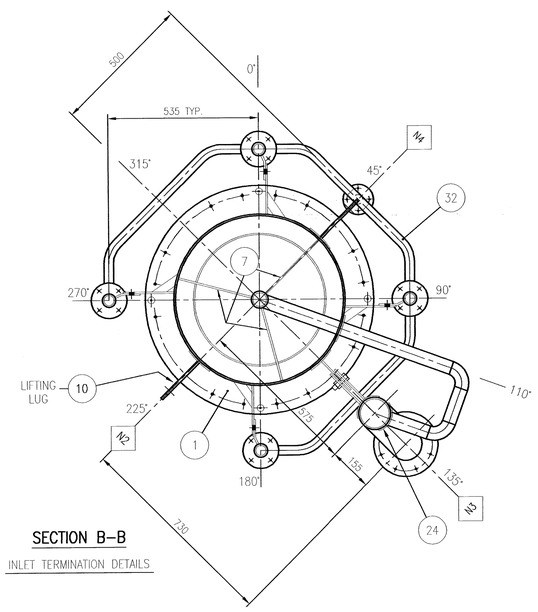

SECTION B-B

INLET TERMINATION DETAILS

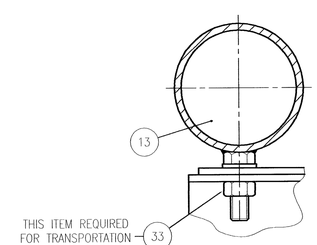

DETAIL-5

STEAM RING LOCATION BOLT

TYPICAL 4 POSITIONS-SEE NOTE 11

MATERIAL LIST

ITEM No.	DESCRIPTION	No. REQ.	NOTE	MATERIAL
1	24" N.B. CL.150 RF. WN. FLANGE 6 WALL ASME-B16.5	1		A350 LF2 CL.1
2	4" N.B. CL.300 RF. WN. FLANGE SCH.40 ASME-B16.5	1		A 105
3	FLARE BODY 6 PLATE	A/R		310S ST. STEEL
4	AIR LOCK SEAL 6 PLATE	1		310S ST. STEEL
5	FLARE OUTLET SECTION 10 PLATE	A/R		310S ST. STEEL
6	CENTRE STEAM GUIDE 6 PLATE	1		310S ST. STEEL
7	CENTRE STEAM GUIDE SUPPORT 6 PLATE	3		310S ST. STEEL
8	WIND DEFLECTOR 6 PLATE	2		310S ST. STEEL
9	FLAME RETENTION BRACKET 10 PLATE	4		310S ST. STEEL
10	LIFTING LUG 10 PLATE	2		310S ST. STEEL
11	USN-S 1" NB. STEAM NOZZLE & FEED PIPE	15	GBA STD.	310S ST. STEEL
12	STEAM RISER 4" NB. PIPE x SCH.40	A/R		316L ST. STEEL
13	STEAM RING 3" NB. PIPE x SCH.40	A/R		316L ST. STEEL
14	CENTRE STEAM LINE 1.1/2" NB. PIPE x SCH.40	A/R		316L ST. STEEL
15	CENTRE STEAM NOZZLE CCN-1.5	1	GBA STD.	310S ST. STEEL
16	STEAM RISER ANCHOR 6 PLATE	1		316L ST. STEEL
17	STEAM RISER GUIDE 6 PLATE	1		310S ST. STEEL
18	PILOT ANCHOR BRACKET 6 PLATE	4		310S ST. STEEL
19	PILOT GUIDE BRACKET 50x50x6 FOLDED ANGLE	4		310S ST. STEEL
20	GBA STANDARD 1½" NB INSPIRATOR ASSEMBLY	4	GBA STD.	CAST ALLOY
21	CHT PILOT BODY	4	GBA STD.	310S ST. STEEL
22	CENTRE STEAM FLARE BODY COMPENSATING PAD 6 PLATE	1		310S ST. STEEL
23	PILOT THERMOCOUPLE (DUPLEX) L = 15m	4	GBA STD.	INCONEL 600
24	STEAM RISER CENTRE STEAM COMPENSATING PAD 6 PLATE	1		316L ST. STEEL
25	SPLIT PIN 4 DIA x 40 LONG OR 3 DIA MIN LOCKING WIRE	14		316L ST. STEEL
26	GBA NAME PLATE & BRACKET	1	GBA STD.	316L/310S ST. STEEL
27	HEX HEAD BOLT M16 x 2p x 40 LONG	8		316 ST. STEEL
28	HEX HEAD BOLT M16 x 2p x 55 LONG	2		316 ST. STEEL
29	HEX HEAD BOLT M16 x 2p x 40 LONG	4		316 ST. STEEL
30	HEX NUT-FULL M16 x 2p	14		316 ST. STEEL
31	HIGH ENERGY SPARK IGNITOR	4	GBA STD.	VARIOUS
32	PILOT MANIFOLD	1		304L ST. STEEL
33	HEX NUT-FULL M16 x 2p - PAINTED RED	4	SEE NOTE 11	316 ST. STEEL
34	BURNBACK THERMOCOUPLE MOUNTING ASSEMBLY	1	GBA STD.	310S ST. STEEL
35	BURNBACK THERMOCOUPLE TYPE-K DUPLEX L = 15m	1	GBA STD.	INCONEL 600

Code1	☑ (Approved) Vendor to submit "For Final (No comment & release for manufacturing)
Code2	☐ (Approved with comments) Vendor shall correct / revise & submit it as "For Final" (Released for manufacturing if change incorporated as indicated)
Code3	☐ (Commented) : Vendor shall correct / revise & resubmit . It as " For Approval" of the date specified : (Corrected documents to be
Code4	☐ Not Acceptable quality (Reject)

The above checking result by OIEC shall in no way relieve Vendor of any liability, obligation and responsibility out of the purchase order and the mutual agreement in writing

OIEC-SP 20&21

DATE : 16/07/2012

DEPT: MA

Signature : E.J

Only for internal review

CV	PI	EL	IN	ME	MA
ST	BU	PR	SA	HV	TL

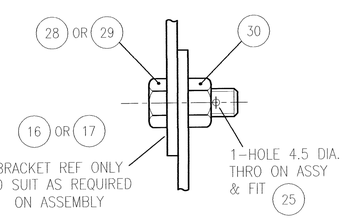

DETAIL-1 (1:2)

TYPICAL STEAM LINE BOLTING DETAIL

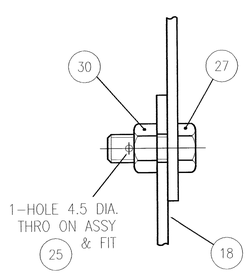

DETAIL-2 (1:2)

PILOT ANCHOR BOLTING DETAIL

INLET FLANGE TERMINATION TABLE			
TP.No	LINE SIZE AND RATING	LINE DUTY	MATERIAL
N2	24"N.B. CL.150 RF. WN.FLANGE 6 WALL ASME-B16.5	FLARE GAS INLET	A350 LF2 CL.1
N3	4" N.B. CL.300 RF.WN. FLANGE ASME-B16.5	STEAM INLET	A105
N4	1" N.B. CL.150 RF.WN. FLANGE ASME-B16.5	PILOT GAS INLET	A182 F304L

NOTES:

1. MATERIAL CERTIFICATION TO BE IN ACCORDANCE WITH EN 10204-3.1
2. PIPE WELDING TO BE IN ACCORDANCE WITH ASME IX / ASME B 31.3. AND GBA DOC. N° VP-SP2021-ON-MA-0700-0057-0042
   STRUCTURAL WELDING TO BE IN ACCORDANCE WITH AWS D1.1
3. ALL FILLET WELDS SHALL HAVE A THROAT LENGTH AS A MAXIMUM EQUAL TO 7/10ths OF THE SMALLEST THICKNESS TO BE WELDED BUT NOT LESS THAN 6mm UNLESS OTHERWISE NOTED.
4. ALL NDT TO BE IN ACCORDANCE WITH ASME V & ASME B 31.3. AND GBA DOC. N° VP-SP2021-ON-MA-0700-0057-0103 (INSPECTION AND TEST PLAN)
5. LONGITUDINAL WELDS TO BE STAGGERED & POSITIONED 50mm MINIMUM CLEAR OF ALL ATTACHMENTS. eg. WEBS PILOT BRACKETS Etc. UNLESS OTHERWISE NOTED.
6. GRIND SMOOTH ALL EXPOSED EDGES OF PLATE.
7. UNLESS OTHERWISE STATED FLANGE BOLT HOLES TO BE EQUI-SPACED ABOUT MAIN CENTRE LINES.
8. SURFACE FINISH : STAINLESS STEEL ITEMS - NATURAL FINISH (PICKLED AND PASSIVATED) CARBON STEEL ITEMS (ITEM 1-2) - HIGH TEMPERATURE ALUMINIUM PAINT
9. TERMINATION FLANGES TO BE PROTECTED WITH BOLTED ON TIMBER DISCS DURING TRANSPORTATION.
10. WEIGHT : 1100 kg
11. 4-OFF STEAM RING SECURING NUTS ITEM 33 (PAINTED RED) ARE FOR FLARE TRANSPORTATION ONLY AND MUST BE REMOVED AFTER INSTALLATION, PRIOR TO FLARE BEING IN USE

REV.	DATE	DESCRIPTION	ORIG.	PREP.	CH'D.	APP'D.	Contractor APP'D
2	25/06/12	AS BUILT	GBA	E.B.	N.B.	T.F.	
1	18/04/12	ISSUED FOR APPROVAL	GBA	E.B.	N.B.	T.F.	
0	21/11/11	ISSUED FOR APPROVAL	GBA	E.B.	N.B.	T.F.	

SOUTH PARS GAS FIELD DEVELOPMENT-
PHASES 20 & 21, ASSALUYEH-IRAN
ONSHORE FACILITIES

NIOC
PARS OIL AND GAS COMPANY

PROJECT No.: POGC-572-88-35 | DOC.CLASS: | SCALE 1:10

GBA FLARE SYSTEMS
Via A. Ramazzotti, 24
20900 MONZA (MB) - ITALY
Tel. +39 (039) 49.27.18
Fax. +39 (039) 24.99.746
Email info@gba-flares.it

GBA JOB No. 413

GBA DWG No. 413/38

OIEC

GCT-24C / LP FLARE TIP GENERAL ARRANGEMENT
140-X-102

DRAWING No. VP-SP2021-ON-MA-0700-0057-0038 | SHEET No. 1 OF 2 | REV. 2

PLOTTING SCALE 1=10

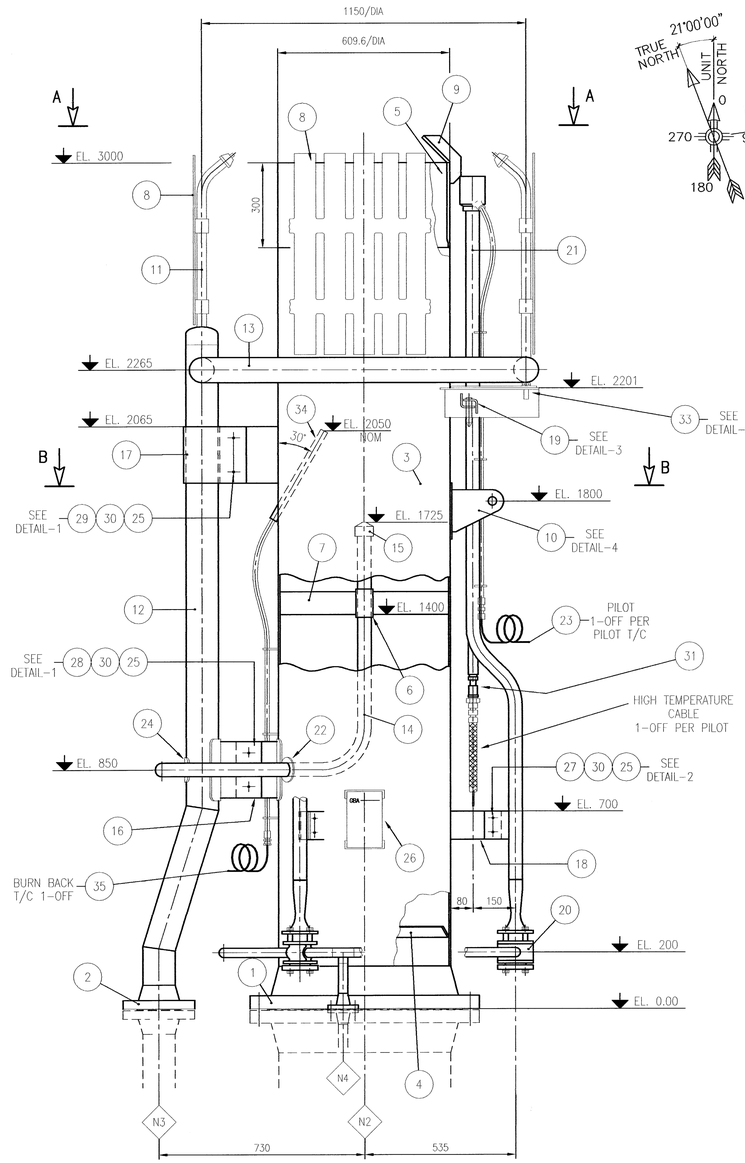

TYPICAL ELEVATION

FOR TRUE ORIENTATION SEE PLAN VIEWS

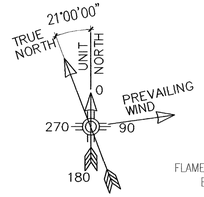

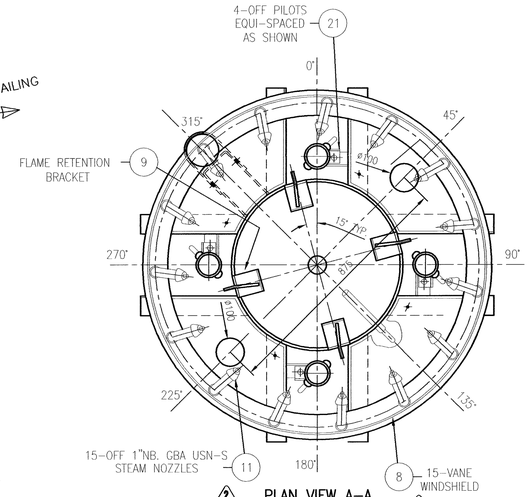

PLAN VIEW A-A

PILOT ORIENTATION DETAILS

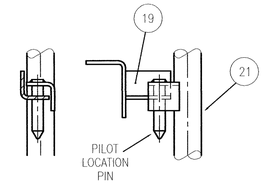

DETAIL-3 (1:5)

PILOT GUIDE BRACKET

LIFT PILOT TO DISENGAGE PIN

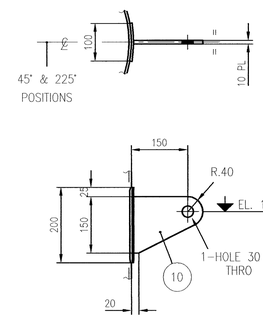

DETAIL-4 (1:7.5)

LIFTING LUG DETAIL

2-OFF REQUIRED

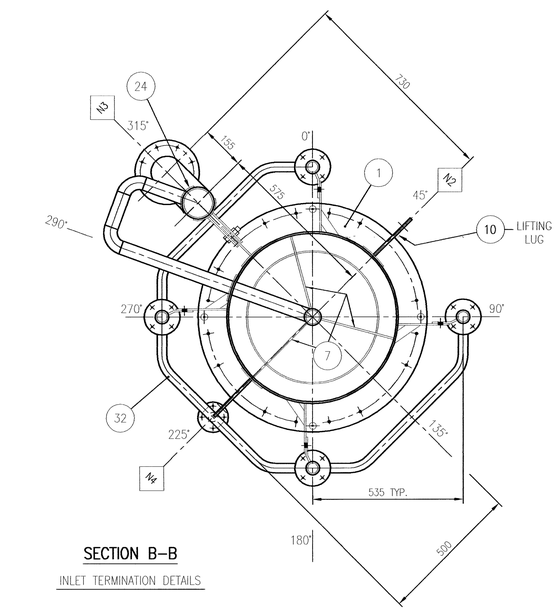

SECTION B-B

INLET TERMINATION DETAILS

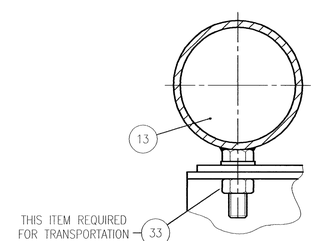

DETAIL-5

STEAM RING LOCATION BOLT

TYPICAL 4 POSITIONS-SEE NOTE 11

MATERIAL LIST

ITEM No.	DESCRIPTION	No. REQ.	NOTE	MATERIAL
1	24" N.B. CL.150 RF. WN. FLANGE 6 WALL ASME-B16.5	1		A350 LF2 CL.1
2	4" N.B. CL.300 RF. WN. FLANGE SCH.40 ASME-B16.5	1		A 105
3	FLARE BODY 6 PLATE	A/R		310S ST. STEEL
4	AIR LOCK SEAL 6 PLATE	1		310S ST. STEEL
5	FLARE OUTLET SECTION 10 PLATE	A/R		310S ST. STEEL
6	CENTRE STEAM GUIDE 6 PLATE	1		310S ST. STEEL
7	CENTRE STEAM GUIDE SUPPORT 6 PLATE	3		310S ST. STEEL
8	WIND DEFLECTOR 6 PLATE	2		310S ST. STEEL
9	FLAME RETENTION BRACKET 10 PLATE	4		310S ST. STEEL
10	LIFTING LUG 10 PLATE	2		310S ST. STEEL
11	USN-S 1" NB. STEAM NOZZLE & FEED PIPE	15	GBA STD.	310S ST. STEEL
12	STEAM RISER 4" NB. PIPE x SCH.40	A/R		316L ST. STEEL
13	STEAM RING 3" NB. PIPE x SCH.40	A/R		316L ST. STEEL
14	CENTRE STEAM LINE 1.1/2" NB. PIPE x SCH.40	A/R		316L ST. STEEL
15	CENTRE STEAM NOZZLE CCN-1.5	1	GBA STD.	310S ST. STEEL
16	STEAM RISER ANCHOR 6 PLATE	1		316L ST. STEEL
17	STEAM RISER GUIDE 6 PLATE	1		310S ST. STEEL
18	PILOT ANCHOR BRACKET 6 PLATE	4		310S ST. STEEL
19	PILOT GUIDE BRACKET 50x50x6 FOLDED ANGLE	4		310S ST. STEEL
20	GBA STANDARD 1½" NB INSPIRATOR ASSEMBLY	4	GBA STD.	CAST ALLOY
21	CHT PILOT BODY	4	GBA STD.	310S ST. STEEL
22	CENTRE STEAM FLARE BODY COMPENSATING PAD 6 PLATE	1		310S ST. STEEL
23	PILOT THERMOCOUPLE (DUPLEX) L = 15m	4	GBA STD.	INCONEL 600
24	STEAM RISER CENTRE STEAM COMPENSATING PAD 6 PLATE	1		316L ST. STEEL
25	SPLIT PIN 4 DIA x 40 LONG OR 3 DIA MIN LOCKING WIRE	14		316L ST. STEEL
26	GBA NAME PLATE & BRACKET	1	GBA STD.	316L/310S ST. STEEL
27	HEX HEAD BOLT M16 x 2p x 40 LONG	8		316 ST. STEEL
28	HEX HEAD BOLT M16 x 2p x 55 LONG	2		316 ST. STEEL
29	HEX HEAD BOLT M16 x 2p x 40 LONG	4		316 ST. STEEL
30	HEX NUT-FULL M16 x 2p	14		316 ST. STEEL
31	HIGH ENERGY SPARK IGNITOR	4	GBA STD.	VARIOUS
32	PILOT MANIFOLD	1		304L ST. STEEL
33	HEX NUT-FULL M16 x 2p - PAINTED RED	4	SEE NOTE 11	316 ST. STEEL
34	BURNBACK THERMOCOUPLE MOUNTING ASSEMBLY	1	GBA STD.	310S ST. STEEL
35	BURNBACK THERMOCOUPLE TYPE-K DUPLEX L = 15m	1	GBA STD.	INCONEL 600

Code1	☑	(Approved) Vendor to submit "For Final (No comment & release for manufacturing)
Code2	☐	(Approved with comments) Vendor shall correct / revise & submit it as "For Final" (Released for manufacturing if change incorporated as indicated)
Code3	☐	(Commented) : Vendor shall correct / revise & resubmit . It as " For Approval" of the date specified : (Corrected documents to be
Code4	☐	Not Acceptable quality (Reject)

The above checking result by OIEC shall in no way relieve Vendor of any liability, obligation and responsibility out of the purchase order and the mutual agreement in writing

OIEC-SP 20&21

DATE : 16/07/2012

DEPT: MA

Signature : E.J

Only for internal review

CV	PI	EL	IN	ME	MA
ST	BU	PR	SA	HV	TL

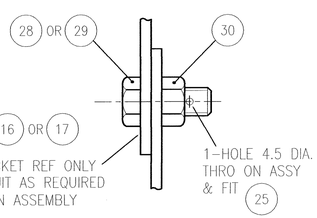

DETAIL-1 (1:2)

TYPICAL STEAM LINE BOLTING DETAIL

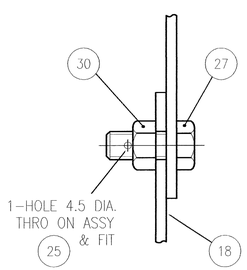

DETAIL-2 (1:2)

PILOT ANCHOR BOLTING DETAIL

INLET FLANGE TERMINATION TABLE			
TP.No	LINE SIZE AND RATING	LINE DUTY	MATERIAL
N2	24"N.B. CL.150 RF. WN.FLANGE 6 WALL ASME-B16.5	FLARE GAS INLET	A350 LF2 CL.1
N3	4" N.B. CL.300 RF.WN. FLANGE ASME-B16.5	STEAM INLET	A105
N4	1" N.B. CL.150 RF.WN. FLANGE ASME-B16.5	PILOT GAS INLET	A182 F304L

NOTES:

1. MATERIAL CERTIFICATION TO BE IN ACCORDANCE WITH EN 10204-3.1
2. PIPE WELDING TO BE IN ACCORDANCE WITH ASME IX / ASME B 31.3. AND GBA DOC. N° VP-SP2021-ON-MA-0700-0057-0042 STRUCTURAL WELDING TO BE IN ACCORDANCE WITH AWS D1.1
3. ALL FILLET WELDS SHALL HAVE A THROAT LENGTH AS A MAXIMUM EQUAL TO 7/10ths OF THE SMALLEST THICKNESS TO BE WELDED BUT NOT LESS THAN 6mm UNLESS OTHERWISE NOTED.
4. ALL NDT TO BE IN ACCORDANCE WITH ASME V & ASME B 31.3. AND GBA DOC. N° VP-SP2021-ON-MA-0700-0057-0103 (INSPECTION AND TEST PLAN)
5. LONGITUDINAL WELDS TO BE STAGGERED & POSITIONED 50mm MINIMUM CLEAR OF ALL ATTACHMENTS. eg. WEBS PILOT BRACKETS Etc. UNLESS OTHERWISE NOTED.
6. GRIND SMOOTH ALL EXPOSED EDGES OF PLATE.
7. UNLESS OTHERWISE STATED FLANGE BOLT HOLES TO BE EQUI-SPACED ABOUT MAIN CENTRE LINES.
8. SURFACE FINISH : STAINLESS STEEL ITEMS - NATURAL FINISH (PICKLED AND PASSIVATED) CARBON STEEL ITEMS (ITEM 1-2) - HIGH TEMPERATURE ALUMINIUM PAINT
9. TERMINATION FLANGES TO BE PROTECTED WITH BOLTED ON TIMBER DISCS DURING TRANSPORTATION.
10. WEIGHT : 1100 kg
11. 4-OFF STEAM RING SECURING NUTS ITEM 33 (PAINTED RED) ARE FOR FLARE TRANSPORTATION ONLY AND MUST BE REMOVED AFTER INSTALLATION, PRIOR TO FLARE BEING IN USE

REV.	DATE	DESCRIPTION	ORIG.	PREP.	CH'D.	APP'D.	Contractor APP'D
2	25/06/12	AS BUILT	GBA	E.B.	N.B.	T.F.	
1	18/04/12	ISSUED FOR APPROVAL	GBA	E.B.	N.B.	T.F.	
0	21/11/11	ISSUED FOR APPROVAL	GBA	E.B.	N.B.	T.F.	

SOUTH PARS GAS FIELD DEVELOPMENT-
PHASES 20 & 21, ASSALUYEH-IRAN
ONSHORE FACILITIES

NIOC
PARS OIL AND GAS COMPANY

PROJECT No.: POGC-572-88-35 | DOC.CLASS: | SCALE 1:10

GBA FLARE SYSTEMS
Via A. Ramazzotti, 24
20900 MONZA (MB) - ITALY
Tel. +39 (039) 49.27.18
Fax. +39 (039) 24.99.746
Email info@gba-flares.it

GBA JOB No. 413

GBA DWG No. 413/38

OIEC

GCT-24C / LP FLARE TIP GENERAL ARRANGEMENT
140-X-202

DRAWING No. VP-SP2021-ON-MA-0700-0057-0038 | SHEET No. 2 OF 2 | REV. 2

PLOTTING SCALE 1=10