۰۱۳۹۱۳۳

ITEM	PARTS NAME	QTY.	DIMENSION	MATERIAL	SUR.H	CORE.H	Weight	REMARKS
1	TOP TANK	1	500*77*58*THK:0.6	COPPER-BRASS	---	---	---	---
2	BOTTOM TANK	1	500*77*58*THK:0.6	COPPER-BRASS	---	---	---	---
3	RIGHT HANDEL	1	490*80*THK:1	ST 37	---	---	---	---
4	LEFT HANDEL	1	490*80*THK:1	ST 37	---	---	---	---
5	RADIATOR CORE	1	485*490*5 ROW TUBES (188 TUBES)	COPPER-BRASS	---	---	---	---
6	INLET PIPE	1	OD:38*L:42*THK:0.7	BRASS	---	---	---	---
7	OUTLET PIPE	1	OD:38*L:42*THK:0.7	BRASS	---	---	---	---
8	INLET WATER	1	AS SHOWN	BRASS	---	---	---	---

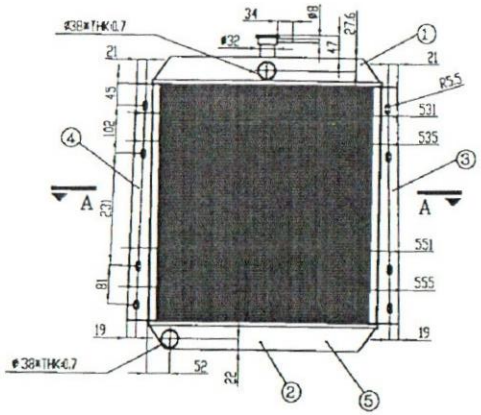

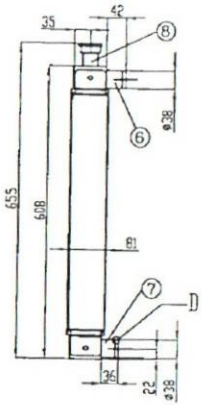

DETAIL D
SCALE 1:1

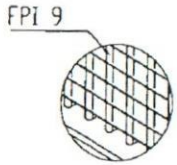

DETAIL B
SCALE 1:2

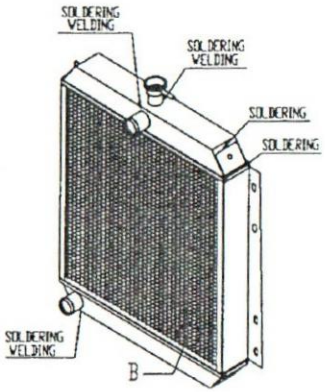

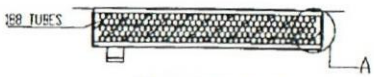

SECTION A-A
SCALE 1:5

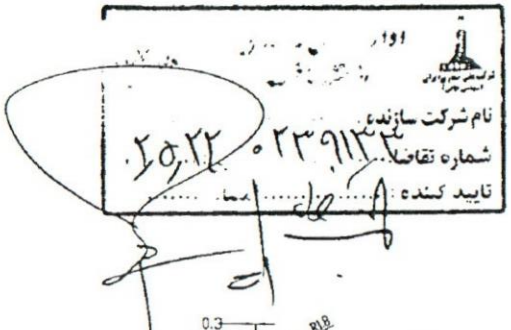

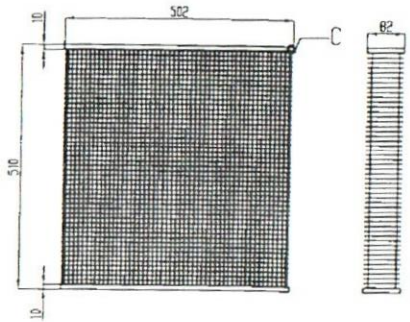

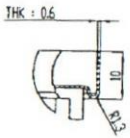

DETAIL C
SCALE 1:1

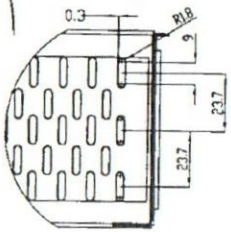

DETAIL A
SCALE 1:2

NOTE 6 :WELDING TECHNIQUE IN THIS RADIATOR FOR ALL CONNECTION IS SOLDERING WELDING.
NOTE 5 :ALL DIMENSIONS IS MM.
NOTE 4 :RADIATOR COLOR IS BLACK AND COLOR THICKNESS IS 50 MICRON.
NOTE 3 :WORKING PRESSURE IS 9 PSI .
NOTE 2 :PRESSURE TEST WITH 11 PSI AND 30 MIN ACCORDING TO STANDARD ASME.
NOTE 1 :Unspecified tolerances is according to ISO 2768-Class(M)

REVISION			
REV	NOTE	BY	DATE
0	— — — — — — — —	------	----

The reproduction, distribution and utilization of this document as well as the communication of its contents without expressed authorization by NIDC is prohibited. offenders will be held liable for the payment of damages. all rights reserved in the event of a patent, utility model or design.

SGS NIDC
مدیریت پژوهش و فن آوری
اداره طراحی و مهندسی

	DATE	NAME	SCALE 1:5
SKETCH	95.05.01	NIDC DES. OFFICE	SHEET 1 OF 5
DRAWN	95.05.01	NIDC DES. OFFICE	SIZE A3
CHECKED	96.12.17	M.HOJATKHAH	
APPROVED	96.12.17	NIDC	

TITLE: RADIATOR ASSY.
PARTS FOR "PERKINS" DIESEL ENGINE MODEL 500-4 SERIES 4-236 4 CYL.

M.E.S.C NO.: 18.71.21.610.2
PART NO.: ----
DRAWING NO. : R.D-96.0000
IFC

ITEM	PARTS NAME	QTY.	DIMENSION	MATERIAL	SUR.H	CORE.H	Weight	REMARKS
3	RIGHT HANDEL	1	AS SHOWN	ST 37	---	---	---	---

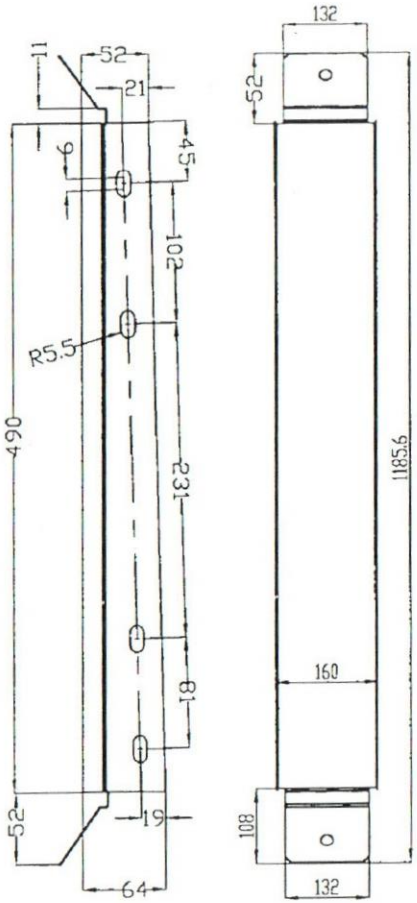

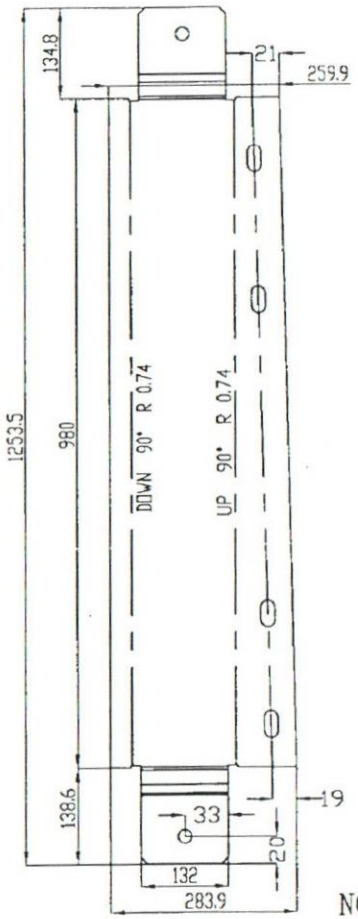

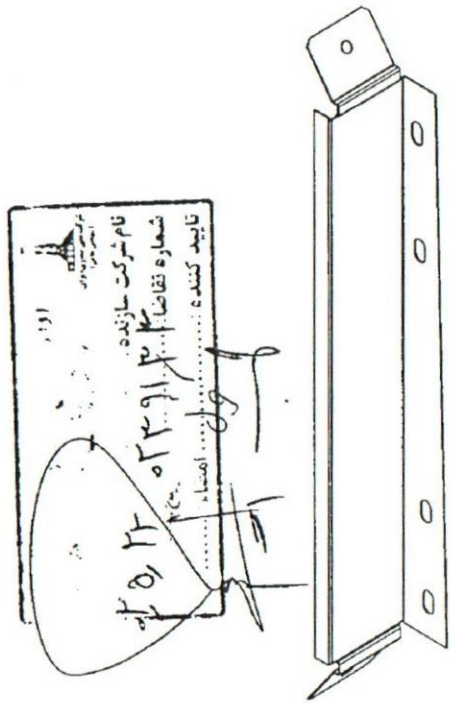

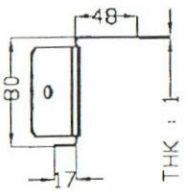

NOTE :Unspecified tolerances is according to ISO 2768-Class(M)

REVISION			
REV	NOTE	BY	DATE
0	— — — — — — — —	------	----

The reproduction, distribution and utilization of this document as well as the communication of its contents without expressed authorization by NIDC is prohibited. offenders will be held liable for the payment of damages. all rights reserved in the event of a patent, utility model or design.

	DATE	NAME	SCALE 1:10	TITLE: RADIATOR ASSY.
SKETCH	95.05.01	NIDC DES. OFFICE	SHEET 5 OF 5	PARTS FOR "PERKINS" DIESEL ENGINE MODEL 500-4 SERIES 4-236 4 CYL.
DRAWN	95.05.01	NIDC DES. OFFICE	SIZE A4	M.E.S.C NO.: 18.71.21.610.2
CHECKED	96.12.17	M.HOJATKHAH		PART NO.: ---- IFC
APPROVED	96.12.17	NIDC		DRAWING NO. : R.D-96.0000 0

SGS NIDC
مدیریت پژوهش و فن آوری
اداره طراحی و مهندسی پایه

ITEM	PARTS NAME	QTY.	DIMENSION	MATERIAL	SUR.H	CORE.H	Weight	REMARKS
4	LEFT HANDEL	1	AS SHOWN	ST 37	---	---	---	---

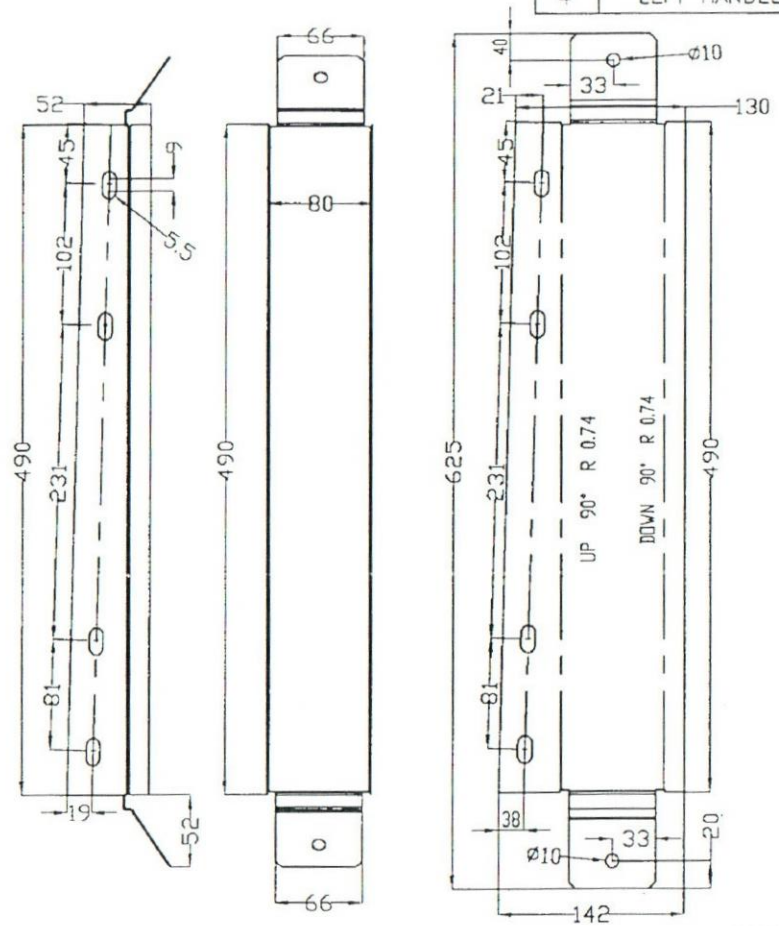

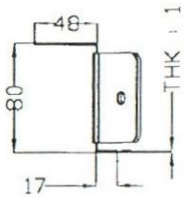

NOTE :Unspecified tolerances is according to ISO 2768-Class(M)

REVISION			
REV	NOTE	BY	DATE
0	— — — — — — — —	------	----

The reproduction, distribution and utilization of this document as well as the communication of its contents without expressed authorization by NIDC is prohibited. offenders will be held liable for the payment of damages. all rights reserved in the event of a patent, utility model or design.

	DATE	NAME
SKETCH	95.05.01	NIDC DES. OFFICE
DRAWN	95.05.01	NIDC DES. OFFICE
CHECKED	96.12.17	M.HOJATKHAH
APPROVED	96.12.17	NIDC

SCALE 1:5
SHEET 4 OF 5
SIZE A4

TITLE: RADIATOR ASSY.
PARTS FOR "PERKINS" DIESEL ENGINE MODEL 500-4 SERIES 4-236 4 CYL.

M.E.S.C NO.: 18.71.21.610.2
PART NO.: ----- IFC
DRAWING NO. : R.D-96.0000 0

SGS NIDC
مدیریت پژوهش و فن آوری
اداره طراحی و مهندسی پایه

نام شرکت سازنده
شماره تقاضا: ۰۲۳۹۱۳ ۱۵/۲۲
تایید کننده:

ITEM	PARTS NAME	QTY.	DIMENSION	MATERIAL	SUR.H	CORE.H	Weight	REMARKS
2	BOTTOM TANK	1	500*58*77*THK:0.6	BRASS	---	---	---	---
7	OUTLET PIPE	1	OD:38*L:36*THK:0.7	BRASS	---	---	---	---

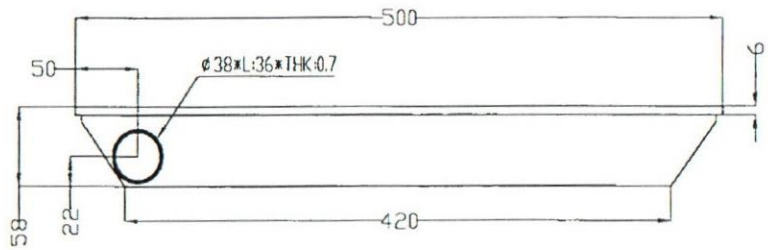

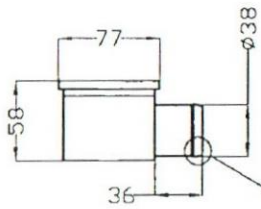

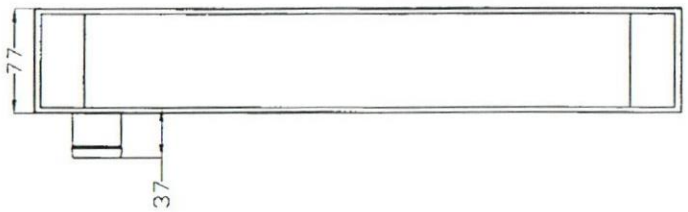

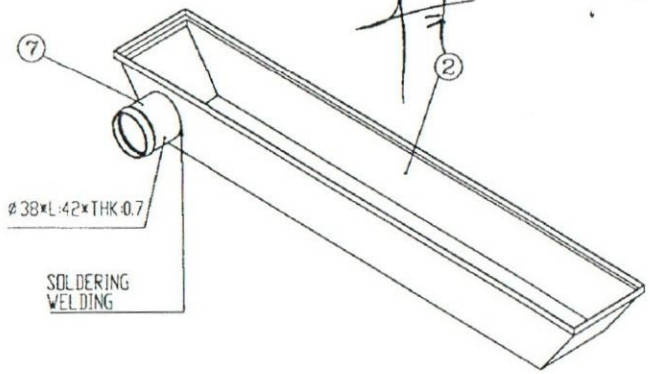

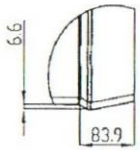

DETAIL A

SCALE 1:1

NOTE :Unspecified tolerances is according to ISO 2768-Class(M)

REVISION			
REV	NOTE	BY	DATE
0	— — — — — —	------	----

The reproduction, distribution and utilization of this document as well as the communication of its contents without expressed authorization by NIDC is prohibited. offenders will be held liable for the payment of damages. all rights reserved in the event of a patent, utility model or design.

	DATE	NAME
SKETCH	95.05.01	NIDC DES. OFFICE
DRAWN	95.05.01	NIDC DES. OFFICE
CHECKED	96.12.17	M.HOJATKHAH
APPROVED	96.12.17	NIDC

SCALE 1:5
SHEET 3 OF 5
SIZE A4

TITLE: RADIATOR ASSY.
PARTS FOR "PERKINS" DIESEL ENGINE MODEL 500-4 SERIES 4-236 4 CYL.

M.E.S.C NO.: 18.71.21.610.2
PART NO.: ----
DRAWING NO. : R.D-96.0000 0
IFC

SGS NIDC
مدیریت پژوهش و فن آوری
اداره طراحی و مهندسی

ITEM	PARTS NAME	QTY.	DIMENSION	MATERIAL	SUR.H	CORE.H	Weight	REMARKS
1	TOP TANK	1	500*58*77*THK:0.7	BRASS	---	---	---	---
6	INLET PIPE	1	OD:38*L:42*THK:0.7	BRASS	---	---	---	---
8	INLET WATER	1	AS SHOWN	BRASS	---	---	---	---

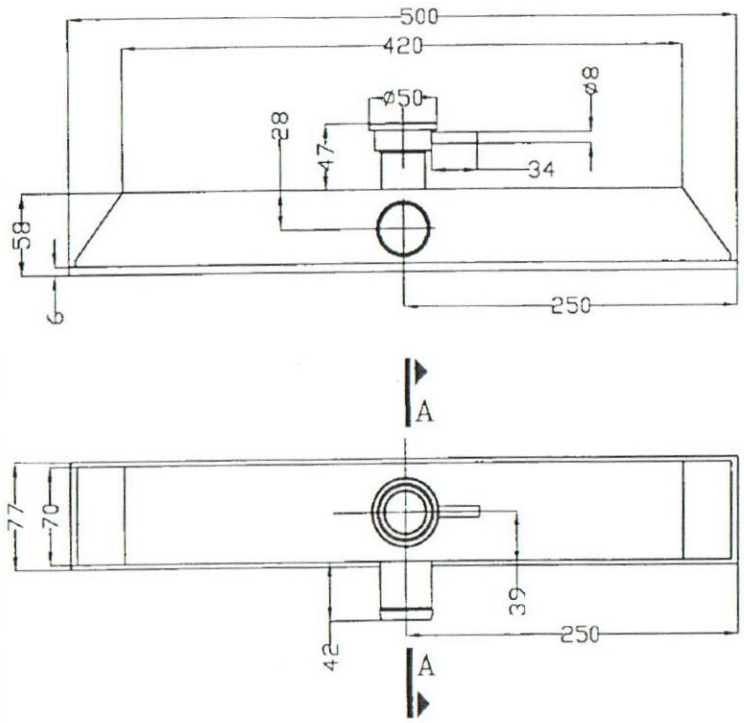

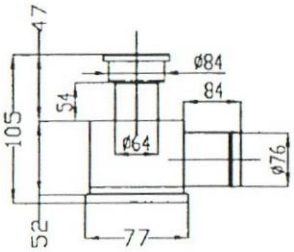

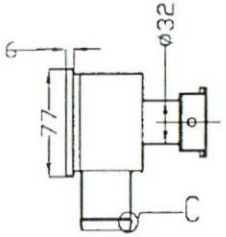

SECTION A–A

SCALE 1:5

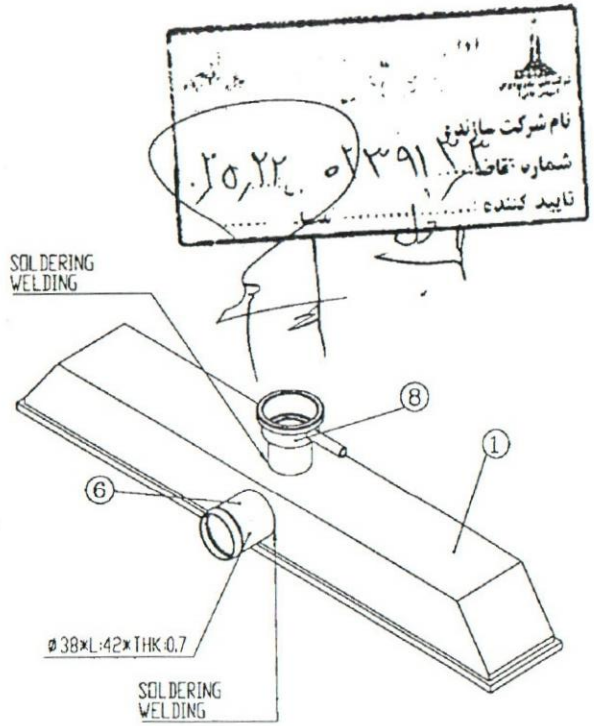

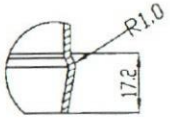

DETAIL C

SCALE 1:1

NOTE :Unspecified tolerances is according to ISO 2768–Class(M)

REVISION			
REV	NOTE	BY	DATE
0	— — — — — — — —	------	----

The reproduction, distribution and utilization of this document as well as the communication of its contents without expressed authorization by NIDC is prohibited. offenders will be held liable for the payment of damages. all rights reserved in the event of a patent, utility model or design.

SGS NIDC

مدیریت پژوهش و فن آوری

اداره طراحی و مهندسی پایه

	DATE	NAME
SKETCH	95.05.01	NIDC DES. OFFICE
DRAWN	95.05.01	NIDC DES. OFFICE
CHECKED	96.12.17	M.HOJATKHAH
APPROVED	96.12.17	NIDC

SCALE 1:10

SHEET 2 OF 5

SIZE A4

TITLE: RADIATOR ASSY.

PARTS FOR "PERKINS" DIESEL ENGINE MODEL 500-4 SERIES 4-236 4 CYL.

M.E.S.C NO.: 18.71.21.610.2

PART NO.: ---- IFC

DRAWING NO. : R.D-96.0000 0

مدیریت پژوهش ، فناوری و مهندسی ساخت

اداره طراحی و مهندسی پایه

شرکت ملی حفاری ایران
سهامی خاص

شرکت ملی نفت ایران

بسته بندی و علامت گذاری قطعات

نام قطعه : RADIATOR ASSY.	M.E.S.C. : 18.71.21.610.2
کارفرما : شرکت ملی حفاری ایران	شماره : NIDC-DO-02-0603 — تاریخ : 1402/05/22

شکل و شرح بسته بندی:

جهت هر عدد از رادیاتور ها در قسمت جلو و عقب کور رادیاتور یونولیت قرار داده شود تا از آسیب و ضربه جلوگیری کند سپس رادیاتور کاملا در پلاستیک پوشانده و در صندوق چوبی مستحکم قرار داده شود . بر روی صندوق برچسب نصب شود که حاوی اطلاعات علامتگذاری باشد.

علامت گذاری (Marking):

روی هر صندوق مشخصات ذیل ذکر گردد :

- آرم شرکت ملی حفاری ایران
- متقاضی (شرکت ملی حفاری ایران)
- سازنده (نام ، آرم و مشخصات سازنده)
- MESC (شماره طبقه بندی کالا)
- Part no. (شماره قطعه اصلی)
- شماره تقاضا ی ساخت
- کد رهگیری

به همراه قطعات در زمان تحویل packing کالا نیز باید تحویل گردد که علاوه بر مشخصات فوق حاوی اطلاعات تعداد بسته ها ، جعبه ها ، صندوق ها و یا پالت ها می باشد .

تصویب کننده :

تهیه کننده :