SND-01000 36

Seal Maker
The system for flexible seal production

Material Data Sheet T125-C25

PTFE-C25 T125 - black

General

T125-C25 is a PTFE (Polytetrafluorethylene) filled with 25% carbon powder. Due to the filling, the material is more resistant to "cold flow" and provides the necessary properties to be used as composite seals with energizer to withstand high pressures. The chemical resistance and temperature range is similar to virgin PTFE, and it is mainly used in rotary applications.

T110-BR40 should not be used for dynamic applications in water.

Physical properties

Density:	DIN 53479	g/cm³	2,05 – 2,15
Hardness:	DIN 53505	Shore D	62 – 67
Tensile strength:	DIN 53455	N/mm²	14 – 18
Elongation at break:	DIN 53455	%	70 – 130
Ball Hardness H132/6:	DIN 53456	N/mm²	43
Coefficient of friction (dyn.):	ASTM D1894	μ	0,13
Wear factor (K):	ASTM D3702	$cm^3 min 10^{-8}/kg\ m\ h$	6 - 20
Compr. strength at 1% deformation:	DIN 53454	N/mm²	7 – 9
Therm. Exp. Coeff. (lin.) 25-100°:	DIN 53328	10^{-5}/°C	10 – 12
Min. service temperature:		°C	- 200
Max. service temperature:		°C	260

Chemical resistance

Water up to 70°	R	Vegetable oils	R
Water up to 90°	R	Fuels	R
HFA	R	Ozone	R
HFB	R		
HFC	R	Air up to 100°	R
HFD	R	Air up to 150°	R
Mineral oils	R	Air up to 200°	R

Key to chemical resistance: R = resistant S = suitable U = unsuitable

Main application

Piston / Rod seals with spring or elastomere energizer, rotary seals, back-up rings, special seals and O-rings, high and low temperature applications, chemical resistance required, low friction applications.

Analysis and Evaluation

The properties relate to fundamental values of PTFE. Product values mentioned above are corresponding to ASTM or DIN standards and have been tested on standardized plates in the laboratory.

v1.1

2nd stage Rider-Ring

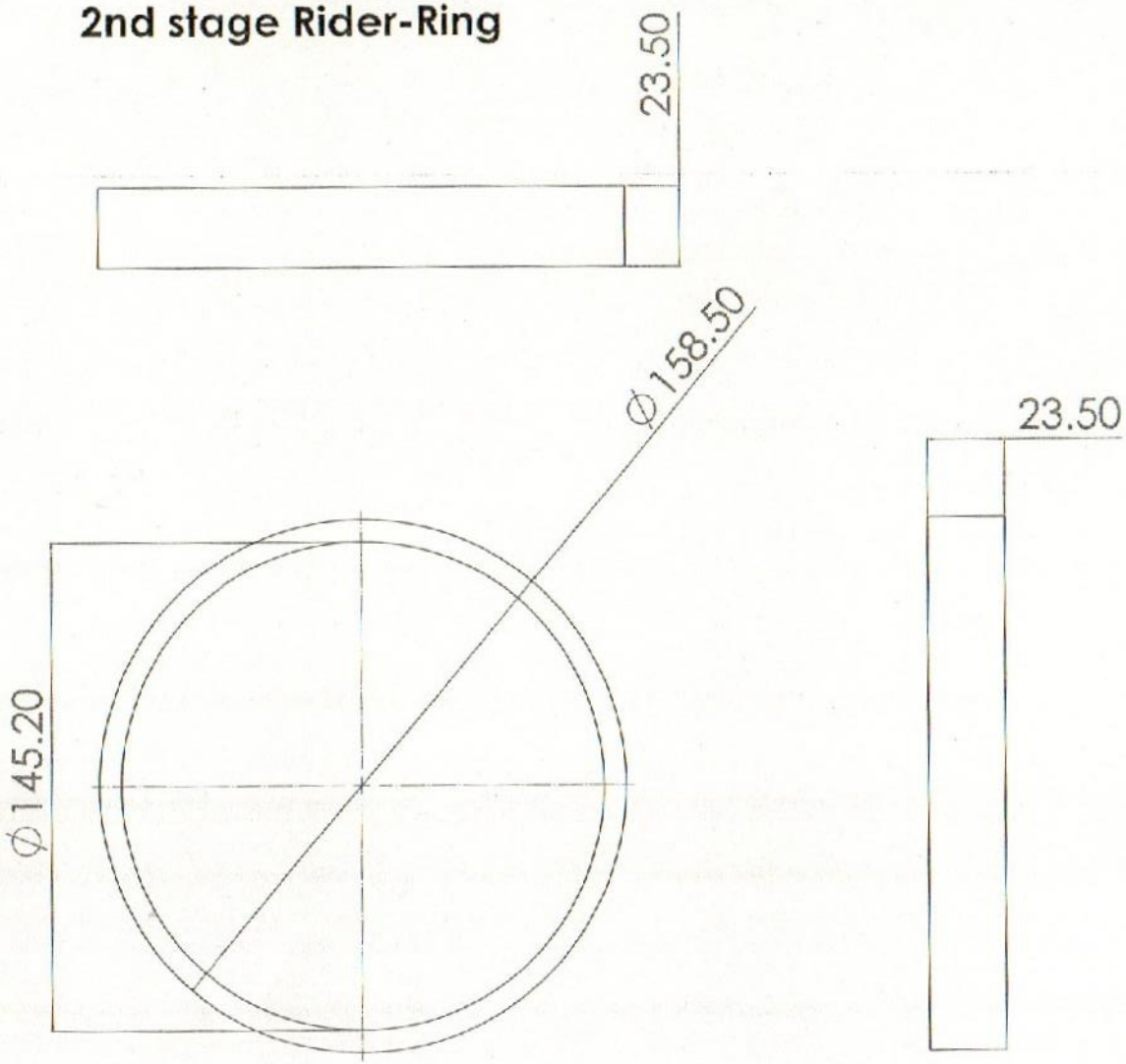

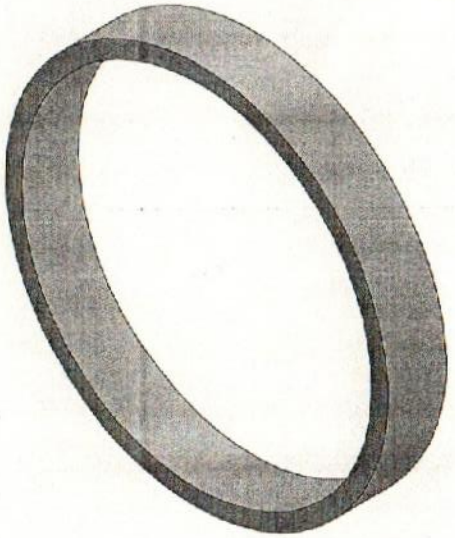

Dimentions are in mm

Rider Ring-2nd stage

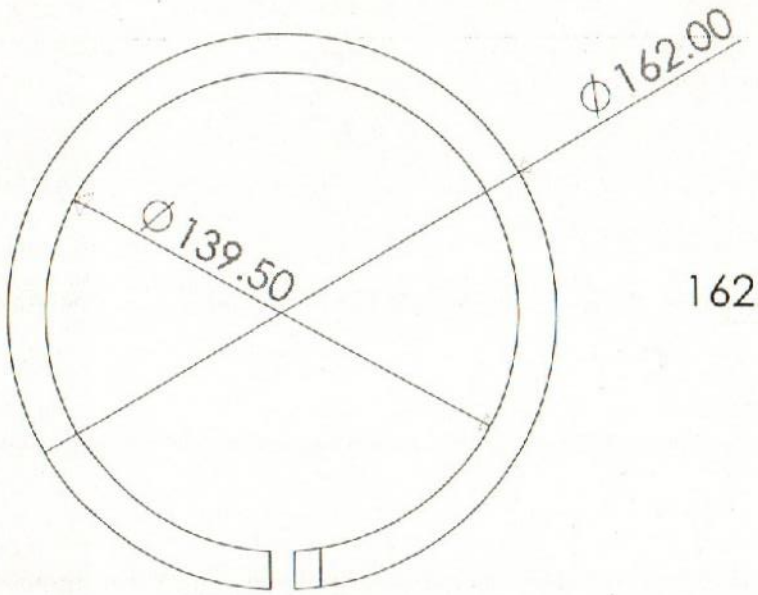

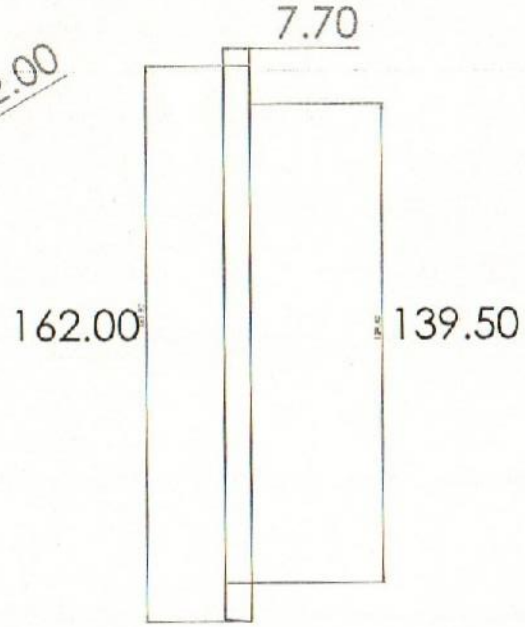

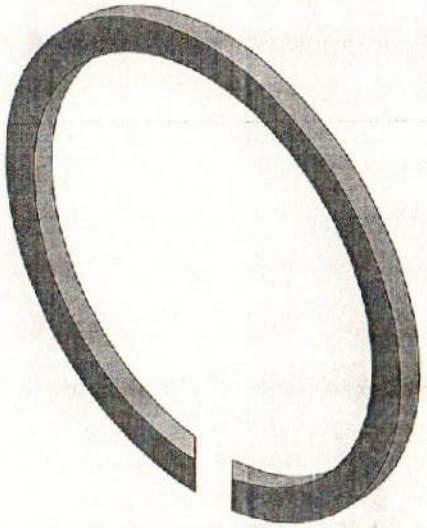

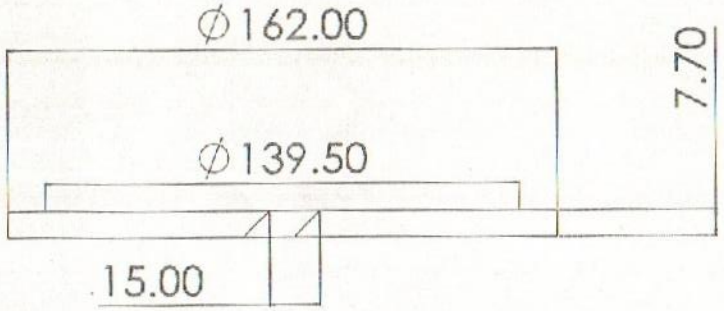

compressor piston ring-2nd sta