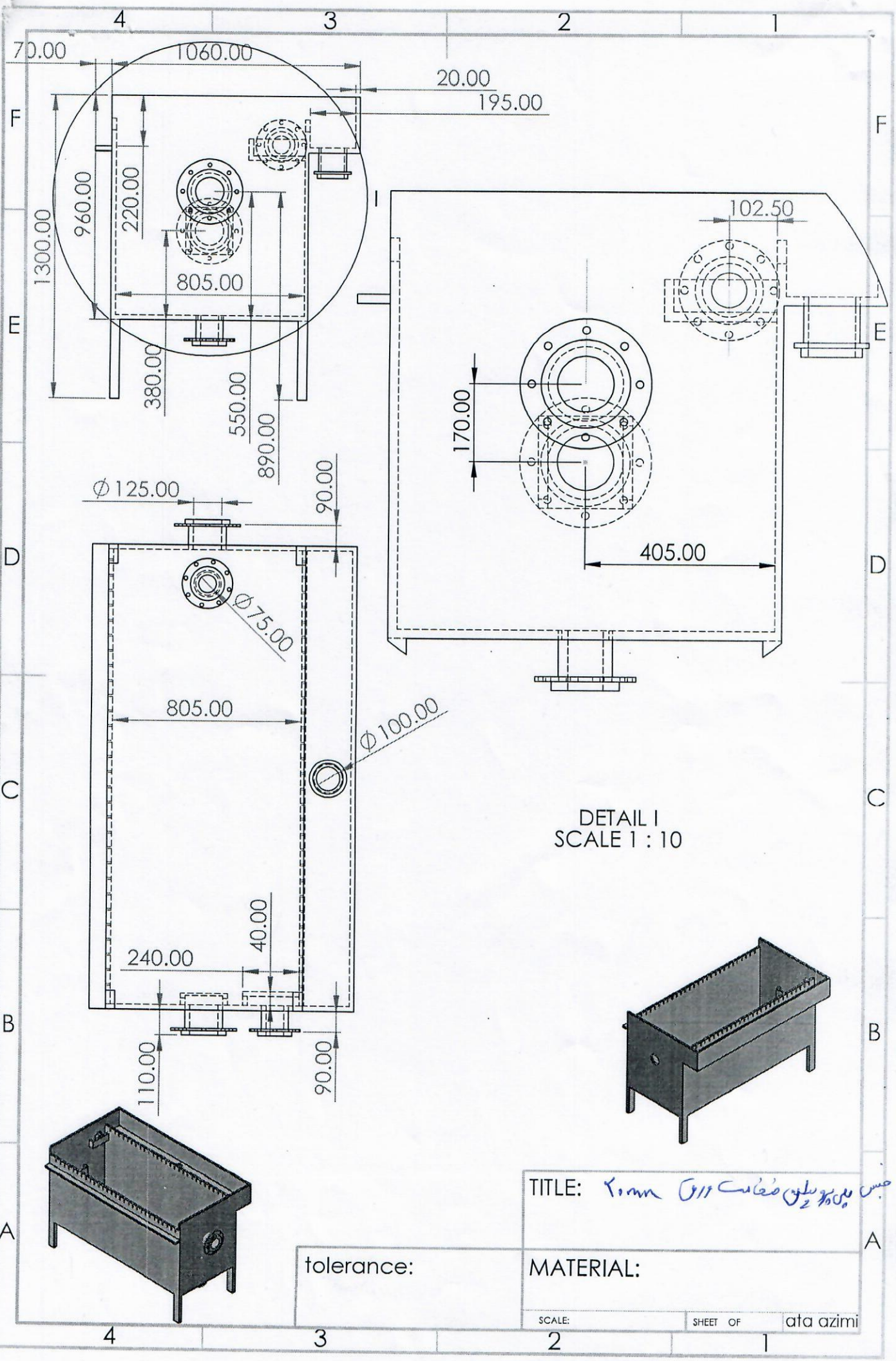
70.00
1060.00
20.00
195.00
960.00
220.00
1300.00
805.00
380.00
550.00
890.00
102.50
170.00
405.00
Ø125.00
90.00
Ø75.00
805.00
Ø100.00
40.00
240.00
110.00
90.00
DETAIL I
SCALE 1 : 10
TITLE:
tolerance:
MATERIAL:
SCALE:
SHEET OF
ata azimi

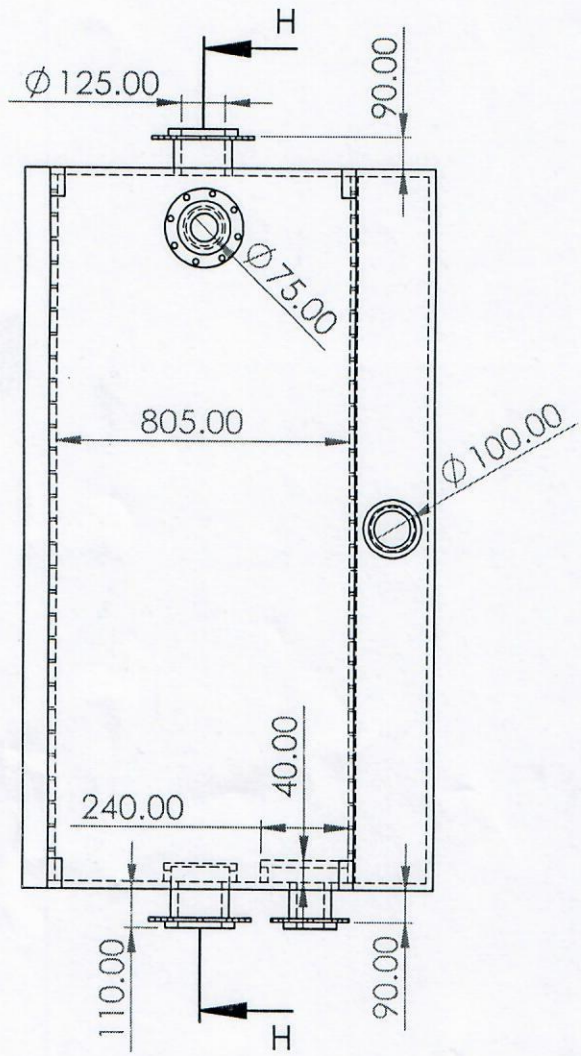

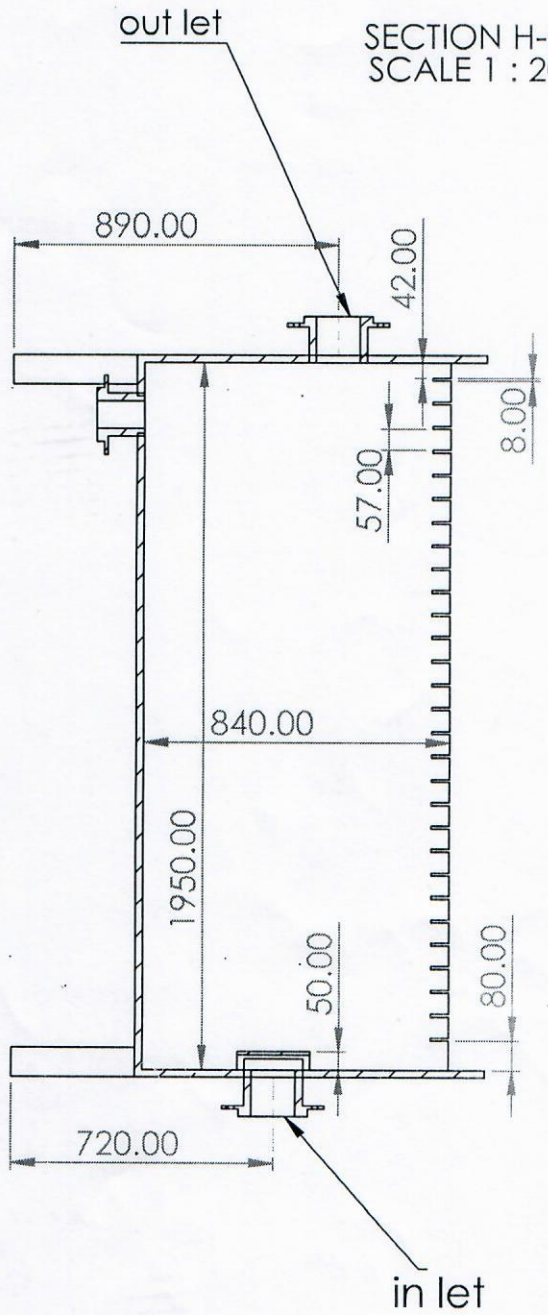

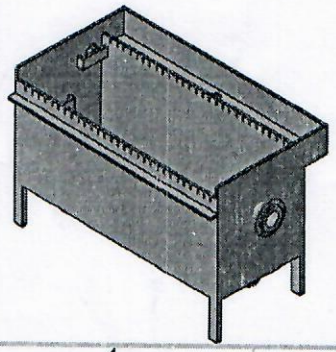

TITLE:

tolerance:

MATERIAL: پلی پروپیلن ضخامت ورق ۲۰mm

SCALE: SHEET OF ata azimi

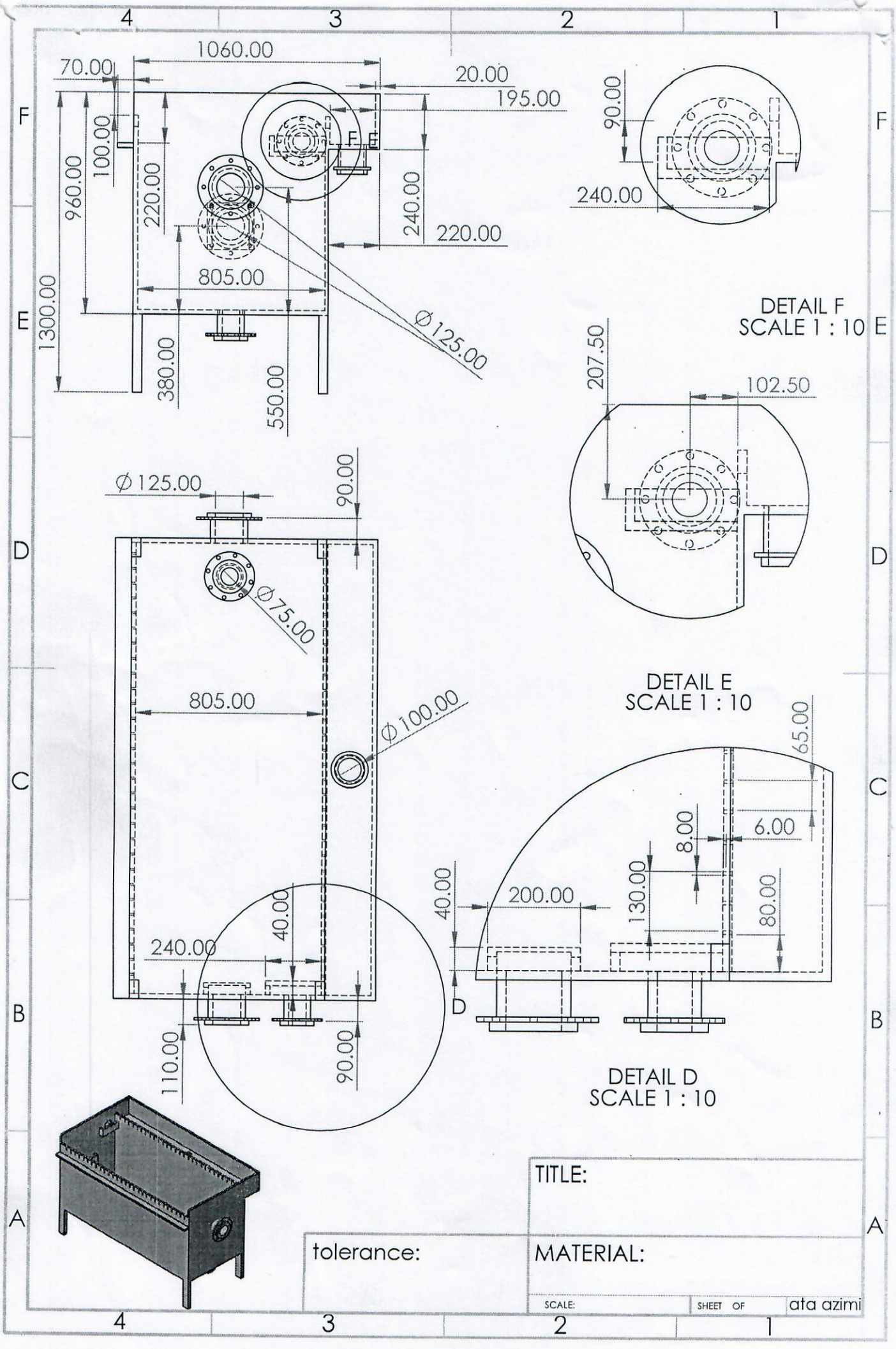
1060.00
70.00
20.00
195.00
100.00
960.00
220.00
240.00
220.00
805.00
1300.00
380.00
550.00
Ø125.00
F
E
90.00
240.00
DETAIL F
SCALE 1 : 10
207.50
102.50
Ø125.00
90.00
Ø75.00
805.00
Ø100.00
DETAIL E
SCALE 1 : 10
65.00
6.00
8.00
130.00
80.00
40.00
200.00
40.00
240.00
110.00
90.00
D
DETAIL D
SCALE 1 : 10
TITLE:
tolerance:
MATERIAL:
SCALE:
SHEET OF
ata azimi