Instructions and Operating Manual

MODEL X87

HIGH-DENSITY PROCESS MONITORING SYSTEM

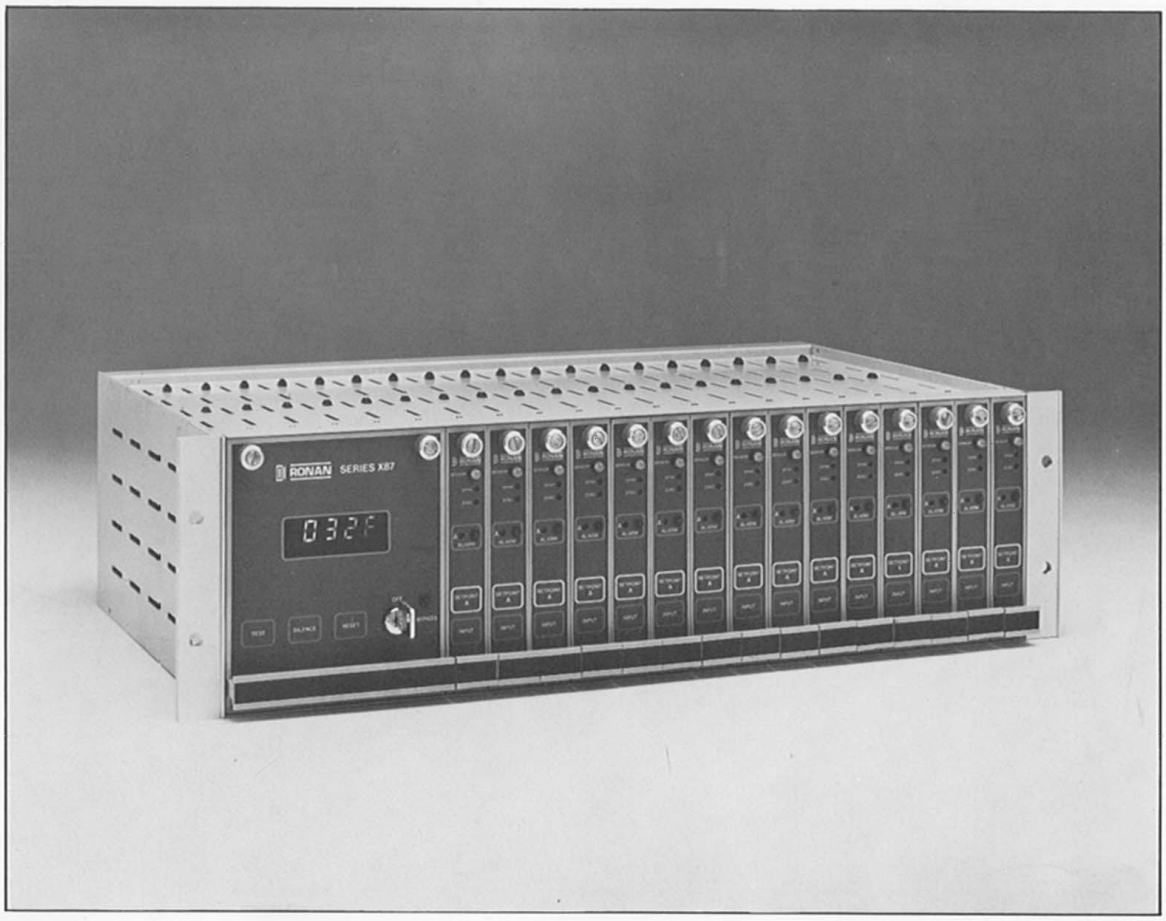

RONAN

TABLE OF CONTENTS

1.0 General Description . . . 3
2.0 Specifications . . . 3
3.0 Installation—General . . . 4
3.1 Dimensions . . . 4
3.2 Installation—Rack Mounting . . . 4
3.3 Power Requirements . . . 4
3.4 Wiring Instructions . . . 4
3.5 Three-Wire RTD Configuration . . . 4
3.6 Two-Wire RTD Configuration . . . 4
3.7 Two-Wire Versus Three-Wire Configuration . . . 4
3.8 Input Wiring Instructions . . . 5
3.9 Thermocouple Connection . . . 5
3.10 Auxiliary Relay Wiring . . . 5
3.11 Auxiliary Relay Contact Current . . . 5
3.12 External Relay Use . . . 5
4.0 System Accuracy Verification and Calibration . . . 5
4.1 RTD Accuracy Test and Calibration . . . 5
4.2 Thermocouple Accuracy Test and Calibration . . . 6
4.3 Transmitter Accuracy Test and Calibration . . . 7
4.4 Master Module Accuracy Test and Calibration . . . 7
5.0 System Operation Verification . . . 8
5.1 Test Verification . . . 8
5.2 Silence Verification . . . 8
5.3 Reset Verification . . . 8
5.4 Auxiliary Relay Operation Verification . . . 8
5.5 Setpoint Alarm Verification . . . 8
5.6 Input Failure Verification . . . 9
5.7 Removal of Input Module from System . . . 9
6.0 Circuit Description . . . 10
6.1 Input Module, Models X87-300, -400, -470, -471, -472, -473 (Schematic X87-1000, -1016) . . . 10
6.2 Thermocouple, mV, mA Amplifier, Models X87-S10, -S20 (Schematic X87-1002) . . . 11
6.3 RTD Amplifier, Model X87-S00 (Schematic X87-1001) . . . 11
6.4 Vibration Input Amplifier, Models X87-S70, -S74, -S76 (Schematic X87-1017) . . . 12
6.5 Position Input Amplifier, Model X87-S78 (Schematic X87-1012) . . . 12
6.6 Frequency Input Signal Conditioner Model X87-579 (Schematic X87-1018) . . . 13
6.7 Transmitter, Model X87-600 (Schematic X87-1004) . . . 13
6.8 Master Module, Model X87-100B (Schematics X87-1003, -1005) . . . 13
6.9 Linearizer, Model X87-200 (Schematic X83-1004) . . . 14
6.10 Engineering Units Linearizer, Model X83-200-EU (Schematic X83-1031) . . . 14
6.11 Digital Panel Meter, Model X87-101 (Schematics X83-1005, -1006) . . . 15
7.0 Parts Lists
S87-S00 RTD Amplifier . . . 15
X87-S10, -S20 Thermocouple, Engineering Units Amplifier . . . 16
X87-S70, -S73, -S74, -S75, -S76, -S77 Vibration Input Amplifier . . . 17
X87-S78 Position Input Amplifier . . . 19

TABLE OF CONTENTS (continued)

7.0 Parts Lists (Continued)

X87-S79 Frequency Input Board . . . 20
X87-T00 Setpoint Range Submodule . . . 21
X87-100B Master Module . . . 21
X87-300 Single-Setpoint Input Module . . . 23
X87-400 Dual-Setpoint Input Module . . . 26
X87-470, -471, -472 Dual-Setpoint Vibration Input Module . . . 29
X87-478 Dual-Setpoint Position Input Module . . . 32
X87-600 Transmitter . . . 35
X83-200-100 Linearizer . . . 36
X83-200-120 Linearizer . . . 37
X83-200-E Linearizer . . . 39
X83-200-J Linearizer . . . 40
X83-200-K Linearizer . . . 41
X83-200-T Linearizer . . . 42
X87-200-R Linearizer . . . 43
X87-200-S Linearizer . . . 44
X83-200-EU Linearizer . . . 45

8.0 Drawings

Schematic, X87-1000 Input Module (Models X87-300, -400, -470, -474, -476, -478) . . . 46
Schematic, X87-1001 RTD Amplifier (Model X87-S00) . . . 47
Schematic, X87-1002 Thermocouple, mV, mA Amplifier (Models X87-S10, -S20) . . . 48
Schematic, X87-1003 Master Module (Horizontal Board) (Model X87-100B) . . . 49
Schematic, X87-1004 Transmitter (Model X87-600) . . . 50
Schematic, X87-1005 Master Module (Vertical Board) (Model X87-100B) . . . 51
Schematic, X87-1012 Position Input Amplifier (Model X87-S78) . . . 52
Schematic, X87-1016 Vibration Monitor, Single and Dual Setpoint (Model X87-470, -471, -472, -473) . . . 53
Schematic, X87-1017 Vibration Input Board . . . 54
Schematic, X87-1018 Frequency Input Board . . . 55
Schematic, X83-1004 Linearizer (Model X87-200) . . . 56
Schematic, X83-1005 Digital Panel Meter (Model X87-101) . . . 57
Schematic, X83-1006 Digital Panel Meter Display Board (Model X87-101) . . . 58
Schematic, X83-1031 Engineering Units Linearizer (Model X83-200-EU) . . . 59
Outline Drawing, X87D1 Relay Rack Enclosure . . . 60
Terminal Arrangements, X87D36 Relay Rack and Panel Mount . . . 61
Terminal Arrangements, X87D36 Rack Mount, Panel Mount Vibration Inputs . . . 62
Outline Drawing, X87D46 Panel-Mount Enclosure . . . 63
Outline Drawing, X87D47 Surface-Mount Enclosure . . . 64
Terminal Arrangements, X87D82 Surface Mount . . . 65
Terminal Arrangements, X87D82 Surface Mount Vibration Inputs . . . 66

Warranty

Ronan warrants equipment of its own manufacture to be free from defects in material and workmanship under normal conditions of use and service, and will repair or replace any component found to be defective, on its return, transportation charges prepaid, within one year of its original purchase. This warranty carries no liability, either expressed or implied, beyond our obligation to replace the unit which carries the warranty.

1.0 GENERAL DESCRIPTION

The Ronan Model X87 High-Density Process Monitoring System provides continuous monitoring of sensors and engineering unit inputs, as required by most industrial processes and machinery. Each system features a number of input modules, or *points*, which function with a single master module. The master module provides digital readout of each input and associated setpoints. The input signals are conditioned and scaled in the input modules and continuously compared against set values in the set-point circuits.

The master module contains a 3½-digit panel meter (DPM), operating pushbuttons, signal conditioning and linearization circuits, system relays and re-flash circuit. The inputs and setpoints of each monitor module can be read out on the DPM. The common trouble alarm (CTA) relay indicates when any setpoint in the system is in an alarm state. The re-flash relay indicates an alarm condition and pulses once for each subsequent alarm. The CTA and re-flash relays return to normal only when all setpoints return to normal and the system is reset.

The monitor modules contain input signal conditioning and scaling, multiturn, infinite-resolution setpoint potentiometers and single- or dual-setpoint control. Each setpoint has an individual relay output, which provides two sets of isolated contact outputs. The input status is annunciated on the monitor module's front panel via an LED for each setpoint and one for power and sensor integrity. The alarm sequence operates as a first-out type or as a manual-reset sequence.

The auxiliary relay operation is jumper plug selectable for normally energized (NE) or normally de-energized (NDE) operation and to follow the input, i.e., non-latching (NL), or to follow the latching alarm sequence (L). The contacts are also jumper plug selectable for normally open (NO) or normally closed (NC) operation. A two-position switch for each setpoint provides easy selection of high or low setpoints. An optional transmitter can be provided with each input.

The monitor modules accept inputs from resistance temperature detectors, thermocouples, voltage sources, current sources and vibration sensors. The vibration input modules accept inputs from eddy probe systems, velocity transducers and accelerometers with integral charge amplifiers. A position monitor is also available, which measures the axial position of a machine shaft. The input signal is provided by an eddy probe system.

2.0 SPECIFICATIONS

Specifications apply at an ambient temperature of 25 ± 2°C unless otherwise stated. Specifications are subject to change without notice.

Inputs: RTD, thermocouple, vibration, position, current, voltage or potentiometer

Input Ranges—RTD:

RTD Type	Degrees Fahrenheit	Degrees Celsius
10 ohm copper	0 to +300	−20 to +150
100 ohm platinum	−300 to +1,000	−185 to +540
120 ohm nickel	−50 to +550	−45 to +290

Input Range—Thermocouple:

T/C Type	Degrees Fahrenheit	Degrees Celsius
Chromel/constantan, E	−50 to +1,800	−45 to +1,000
Iron/constantan, J	−50 to +1,400	−45 to +760
Chromel/alumel, K	−50 to +2,000	−45 to +1,200
Platinum/13%, rhodium/platinum, R	+480 to +2,000	+250 to +1,700
Platinum/10%, rhodium/platinum, S	+300 to +2,000	+150 to +1,700
Copper/constantan, T	−300 to +700	−200 to +370

Input Ranges—Milliamps: Standard ranges are 1-5 mA, 4-20 mA and 10-50 mA. Other ranges can be provided.

Input Ranges—Voltage: Standard ranges are 0-5 V, 1-5 V, 0-10 V and 2-10 V. Other ranges can be provided.

Input Range—Ohms: 0-1000 ohms

Input Range—Displacement: 0-40 mils peak-peak (100 or 200 mV/mil)

Input Range—Velocity: 0-50 in./sec. peak (100 mV peak/in./sec.)

Input Range—Acceleration: 0-50 g's peak (100 mV/g from integral charge amplifier)

Input Range—Shaft Position: 0 to ± 40 mils (100 or 200 mV/mil)

Input Impedance: *RTD:* >100 kohms; *Thermocouple:* >10 Mohms; *4-20 mA:* 3.125 ohms; *10-50 mA:* 1.25 ohms; *Voltage:* >100 kohms; *Vibration:* 10 kohms

Sensor Failure Response: Red front-panel LED activates system horn; selective alarm inhibit on both setpoints

Common Mode Voltage: ± 300 VDC or peak AC 60 Hz without damage

System Accuracy: *Input module, master module, curve-fitting and digital meter:* ± 2°F or C for 0-1,000°; ± 3°F or C over 1,000°

Ambient Temperature Effect at 75 ± 40°F:
Gain: ± 0.02% of reading per °C
Zero: ± 0.05°C per °C, ± 2 μV RTI

Meter Resolution: ± 1°C or F

Setpoint Range: Same as sensor input ranges as shown above. (Range may be reduced on special order.)

Setpoint Resolution: + 0.1% of setpoint range

Hysteresis: Adjustable by graduated control from 1°F to approximately 50°F

Alarm Setpoints: One or two, each with DPST contact (Form-A or -B)

Contact Rating: *General purpose:* 3 A at 240 VRMS or 28 VDC, resistive *Hermetically sealed:* 2 A at 115 VRMS (Form-A and Form-B); 0.2 A at 115 VRMS (Form-C); 2 A at 28 VDC, resistive

Alarm Sequence: First-out or manual reset

Remote Select Option: Input and setpoints selected for display via remote switches (No analog signals are routed through remote switches.)

Master Module Readout: 3½-digit panel meter

Shutdown Bypass: Key lock switch with LED indicator (flashing if bypass is activated)

Alarm Relay Output: *Common trouble alarm:* Contact rating same as alarm setpoints (Contacts transfer when any setpoint goes off normal, will reset after all setpoints normal.)

Re-Flash Relay Output: Contact rating same as setpoints (Contacts transfer when first setpoint goes off normal and pulses for each subsequent alarm.)

Horn Relay Output: Contact rating same as alarm setpoints (Contacts transfer when any point goes into alarm, resets when SILENCE switch is pressed.)

Transmitter:
Output: Isolated; 1-5 mA, 4-20 mA, 10-50 mA
0-5 VDC, 1-5 VDC, 0-10 VDC, 2-10 VDC
Accuracy: ± 0.2% of span (not linearized)

Power Requirements: 24 VDC ± 10%

Power Consumption: 10 W for master module; add 3.5 W for each monitor module and 0.8 W for each optional transmitter

Size: See mechanical dimensions

Weight: *Master module:* 2.6 lbs. (1.2 kg)
Chassis: 10.0 lbs. (4.6 kg)
Input modules: 0.7 lb. (0.318 kg)

3.0 INSTALLATION—GENERAL

All Ronan-manufactured equipment is carefully packed and shipped in custom-designed crates to prevent shipping damage. Any discrepancies between shipping contents and invoice should be immediately reported to Ronan or to the Ronan representative.

The mechanical design of the Model X87 is intended for relay rack-mounted installation. All operating controls are available on the front panel of the unit.

The normal calibration and service adjustments are readily accessible from the front. All power, input and output connections are available at the rear of the chassis.

3.1 Dimensions

Relay rack-mounted chassis measures
19″ wide × 5.22″ high × 11.91″ deep
(48.28 cm × 13.25 cm × 30.26 cm).

3.2 Installation—Rack Mounting

The rack-mounting X87 series are best installed on standard EIA rails, which come pre-drilled and tapped at the proper spacing. Should mounting on a non-standard rail be attempted, refer to mechanical drawings for dimensions.

3.3 Power Requirements

The Ronan X87 system is designed to operate from a 24 VDC power supply or battery. Refer to section 2.0 Specifications for fusing and specific power requirements. Connections are to the 24 V "+" and "−" rear terminals.

3.4 Wiring Instructions

Wiring will depend upon the functional requirements of any particular system. For complete wiring information, refer to the terminal arrangements drawing (X87D36).

CAUTION: Do not apply power before completion of all wiring. Carefully review and verify the correctness of the wiring using an ohmmeter.

Note: If the module is left connected and energized during the repair of an open input, alarm conditions will be present. Therefore, the module should be unplugged from its connector or the system's shutdown BYPASS switch should be set to the BYPASS position for the duration of the corrective action.

3.5 Three-Wire RTD Configuration

All X87 systems are shipped in the three-wire configuration, unless otherwise specified. Connect the RTD "+" wire to terminal 1 and the RTD "−" wire to terminal 2. Connect the RTD COM to terminal 3.

Note: No damage will result if this polarity is not observed. However, the monitor will not respond properly.

3.6 Two-Wire RTD Configuration

Connect the RTD "+" wire to terminal 1 and the RTD "−" wire to terminal 2. Add a jumper between terminals 2 and 3.

3.7 Two-Wire Versus Three-Wire Configuration

If the two-wire configuration is selected, it is important to realize that the wire resistance in series with the RTD directly affects the accuracy of the temperature reading. The error is an offset in degrees and is constant through the RTD temperature range.

$$\text{Approx. Temperature Error} = \frac{R_{Lead}}{\Delta RTD} \text{ (Degrees)}$$

ΔRTD = Resistance change per °F of the RTD

Resistance of copper wire per 1,000 feet:

24 AWG	25.67 ohms
22 AWG	16.14 ohms
20 AWG	10.15 ohms
18 AWG	6.38 ohms
16 AWG	4.02 ohms
14 AWG	2.52 ohms
12 AWG	1.59 ohms
10 AWG	0.99 ohms

RTD Probe	ΔRTD
100 ohm platinum	0.215 ohms/°F
120 ohm nickel	0.585 ohms/°F
10 ohm copper	0.023 ohms/°F

Example: A 100-ohm platinum RTD is mounted 100 feet from the system. The wire selected is 18 gauge with:

$R_{Lead} = 100 \text{ feet} \times 6.38 \text{ ohms}/1{,}000 \text{ feet}$

$$R_{Lead}\ \text{Total} = \frac{100 \times 6.38}{1{,}000} = 0.638 \text{ ohms}$$

Multiply by 2 to include both leads = 1.276 ohms.

$$\text{Temp. Error} = \frac{1.276}{.215} = 5.93\,°\text{F}$$

Note: Systems using copper probes are highly sensitive to wire resistance due to the low resistance of the probe. The three-wire configuration is recommended whenever utilizing copper RTDs.

The three-wire configuration effectively eliminates the temperature errors caused by the wire resistance, by adding the resistance of one wire in opposite legs of the bridge and, therefore, cancelling out these effects.

In the three-wire hook-up, special care should be taken to equalize the length and size of the RTD "+" and the RTD "−" leads.

3.8 Input Wiring Instructions

The low-level signal input leads must be physically isolated from wires carrying relay contact current, coil currents, or any other source of high current or voltage transients. The signal input leads should be twisted, if possible, from the sensor to the system input terminals. If shielded leads are used, the shield should be grounded at one end only. (Ground to the chassis for RTDs and at the sensor for thermocouples.)

3.9 Thermocouple Connection

Connect the thermocouple "+" lead to terminal 1. Connect the thermocouple "−" lead (ISA/ANSI standard color is red for the "−" lead) to terminal 2. The thermocouple may be either grounded or floating.

3.10 Auxiliary Relay Wiring

Two sets of contacts are accessible at the rear terminals for each setpoint. The contacts may be either NO or NC, depending on the selection of a jumper on the monitor board.

The relay may be either NE or NDE, depending on the placement of a jumper plug on the monitor circuit board.

Refer to section 2.0 Specifications for contact rating of all system relays.

3.11 Auxiliary Relay Contact Current

The general purpose and hermetically sealed relays used in the Model X87 are not designed to function in dry circuit or very low current applications. If they must be used to drive low-current loads, a shunt load (e.g., power resistor) should be connected across the actual load to increase the current to 0.1 A total.

3.12 External Relay Use

The X87 auxiliary relays may be used to drive external relays; however, spike suppression devices must be used across the external relay coil. In the case of a DC coil, a conventional rectifier diode should be connected across the coil (cathode to the "+" voltage side). For AC-driven coils, an appropriate transient spike suppression circuit or device must be used, e.g., a varistor or R-C circuit or both. If voltage suppression techniques aren't used, hundreds or thousands of volts of peak transients can be induced into the monitoring system, causing nuisance alarms.

4.0 SYSTEM ACCURACY VERIFICATION AND CALIBRATION

The Ronan X87 High-Density Process Monitoring System should perform within its rated accuracy as calibrated at the factory for an indefinite period. However, periodic tests should be made to verify the accuracy of the system. This is best done by simulating an accurate sensor at the input terminals at the rear of the rack mount. A precision resistor box (0.02% resistors or better) can be used for RTD points and a thermocouple simulator is used for thermocouple points.

4.1 RTD Accuracy Test and Calibration

The three-wire connection, as shown in Figure 1, should be used for calibration of RTD points.

Before testing the monitor boards, be sure the indication on the master module panel is 32°F (0°C) when no module switches are depressed.

After checking the master module zero, set the precision resistor box to the correct value for 32°F (0°C). (Platinum = 100.0 ohms, nickel = 120.0 ohms, copper = 9.035 or 10.0 ohms.)

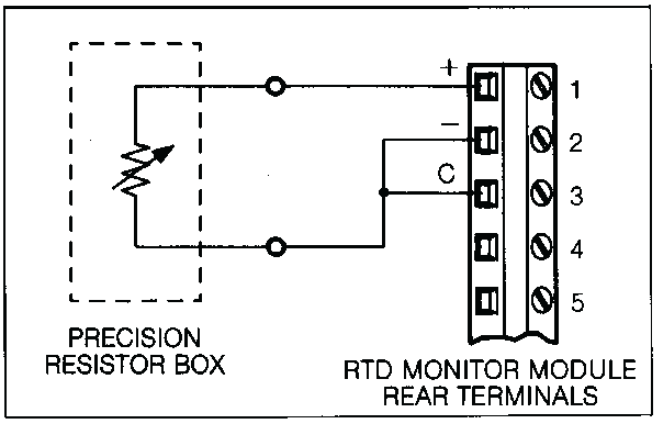

Figure 1: Three-Wire Connection

Press the INPUT select switch on the front panel of the RTD monitor module. The master module display should indicate 32 ± 1°F (0 ± 1°C).

The RTD monitor gain can be checked by simulating the RTD at an elevated temperature. Refer to Table 1 for the specific RTD values at various temperatures. Set the resistor box to a value corresponding to an upscale temperature and again press the INPUT select switch. The master module display should indicate the correct temperature ±2°F or C. If required, an extender board should be used to allow access to the zero (R1) and span (R21) potentiometers on the plug-in RTD amplifier board (schematic X87-1001). The gain of any monitor module should rarely need to be re-calibrated, but if the gain of a channel appears to need adjustment, test several channels first to determine if a gain adjustment may be required in the master module. (All channels will be inaccurate by the same amount if the master module needs calibration.) Refer to section 4.4 for test and calibration of the master module.

Temp. °F	RTD Resistance in ohms			
	Platinum	Nickel	Copper (at 0°C)	
			10 ohms	9 ohms
−80	75.12			6.624
+32	100.00	120.00	10.00	9.035
+40	101.76	122.98	10.19	9.207
+70	108.33	135.17	10.89	9.850
+170	130.00	179.49	13.23	11.995
+250	147.09	219.70	15.10	13.712
+400	178.49	309.04		16.949
+500	198.98	380.57		19.116

Table 1: RTD Values Versus Temperature

4.2 Thermocouple Accuracy Test and Calibration

In order to check the accuracy of a thermocouple (T/C) monitor module, a precision T/C simulator should be used and connected as shown in Figure 2a or 2b, using the correct T/C alloy wire.

Set the thermocouple simulator to the correct T/C type and set the output to +32°F (0°C). The master module display should indicate +32 ± 1°F (0 ± 1°C) when the monitor module's INPUT switch is pressed.

Several simulated temperatures within the range of the system may be tested to verify the accuracy of the monitor gain. Table 2 lists some thermoelectric voltages for types E, J, K, T, R and S and their corresponding temperatures.

If calibration is required, an extender board should be used to allow access to the zero (R1) and gain (R20) controls on the plug-in thermocouple amplifier board (schematic X87-1002).

The gain of any monitor board should rarely need to be re-calibrated, but if the gain of a channel appears to need adjustment, test several channels first to determine if a gain

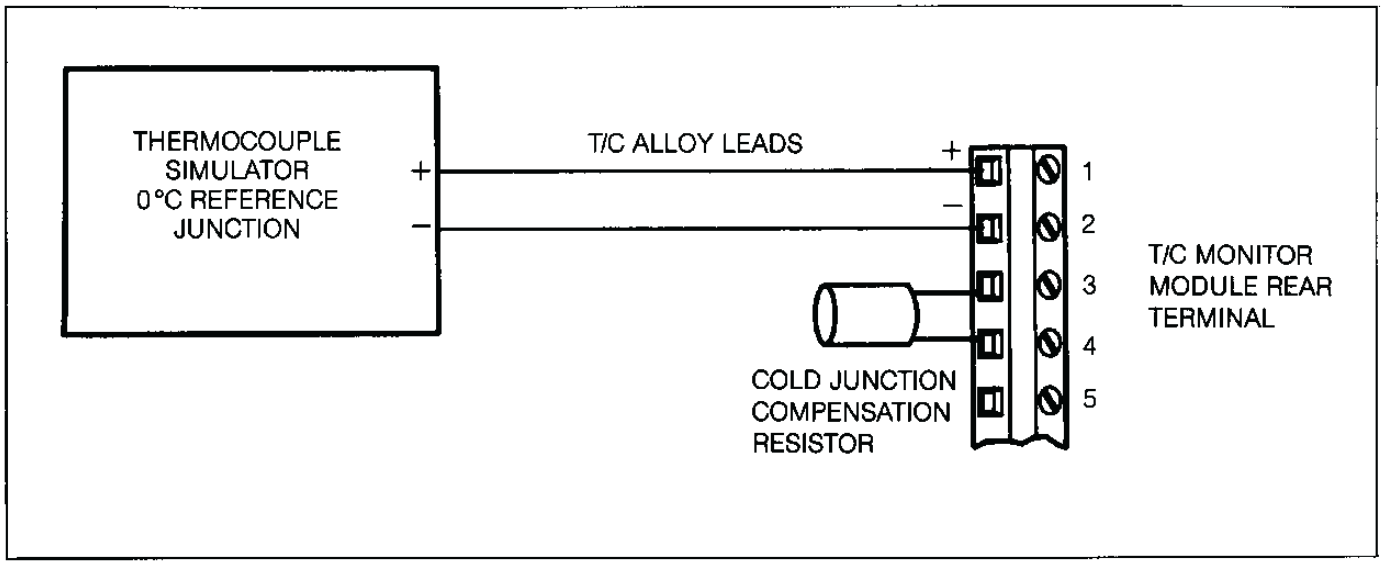

Figure 2a

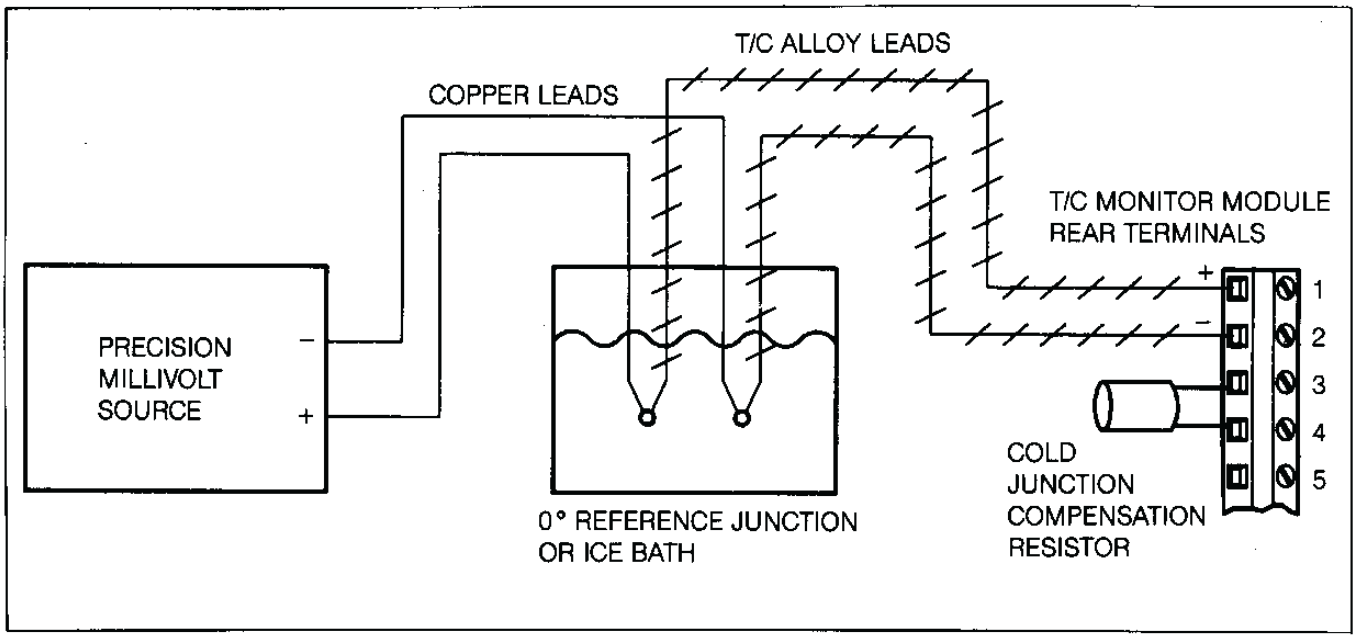

Figure 2b

adjustment may be required in the master module. (All channels will be inaccurate by the same amount if the master module needs calibration.)

Temp. °C	Thermoelectric Voltage in Millivolts Reference Junction at 0°C					
	E	J	K	T	R	S
0	0.000	0.000	0.000	0.000		
+50	3.047	2.585	2.022	2.035		
+100	6.317	5.268	4.095	4.277		
+150	9.787	8.008	6.137	6.702		1.029
+200	13.419	10.777	8.137	9.286		1.440
+250	17.178	13.553	10.151	12.011	1.923	1.873
+300	21.033	16.325	12.207	14.860	2.400	2.323
+350	24.961	19.089	14.292	17.816	2.896	2.786
+400	28.943	21.846	16.395	20.869	3.407	3.260
+450	32.960	24.607	18.513		3.933	3.743
+500	36.999	27.388	20.640		4.471	4.234
+550	41.045	30.210	22.772		5.021	4.732
+600	45.085	33.096	24.902		5.582	5.237
+650	49.109	36.066	27.022		6.155	5.751
+700	53.110	39.130	29.128		6.741	6.274
+800	61.022		33.277		7.949	7.345
+900	68.783		37.325		9.203	8.448
+1000	76.358		41.269		10.503	9.585
+1200					13.224	11.947
+1400					16.035	14.368
+1600					18.842	16.771
+1700					20.215	17.942

Table 2: T/C Voltages vs. Temperature
Reference: *NBS Monograph 125*

4.3 Transmitter Accuracy Test and Calibration

The optional transmitter board is tested and calibrated while in the system and connected to the monitor module. An extender board should be used with the monitor module to allow access to the transmitter's zero and span adjustment potentiometers. Connect a calibration input to the module under test per section 4.1 or 4.2. Connect a milliammeter to the transmitter output "+" (screw terminal 8) and "−" (screw terminal 9). With the input set to the SPAN ZERO of the transmitter (e.g., 0°C for a 0-500°C transmitter), the output should be the zero of the output span (4 mA for a 4-20 mA output). If the measured output is inaccurate, adjust the zero potentiometer (R2) on the plug-in transmitter board. Set the input to the full-scale value of the transmitter output. If necessary, adjust using the span potentiometer (R1) on the plug-in transmitter board (schematic X87-1004).

4.4 Master Module Accuracy Test and Calibration

The zero of the master module can be checked when none of the monitor module inputs or setpoints are selected for readout. With the master module's internal °C/°F switch in the °C position, the DPM should display 0°C. If necessary, the zero control (R41) on the master module's horizontal board can be used to adjust the zero.

To check the gain of the master module, a calibration signal must be applied to the analog "+" and "−" inputs to the master module. A 4.99 k, 1% resistor must be used in series with the "+" input to simulate the resistance in series with the signals from the monitor modules. Failure to use this series resistor will

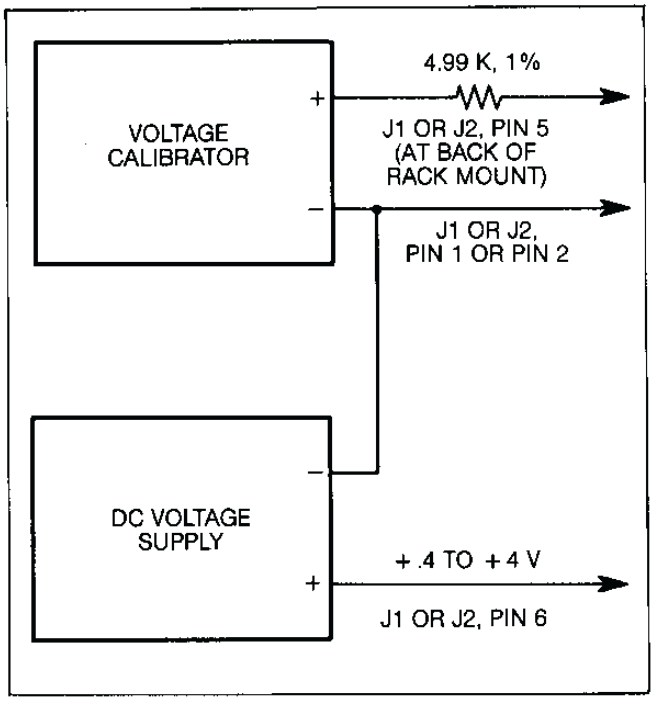

Figure 3: Master Module Calibration Circuit

result in a −1% gain error in the master module after it is calibrated. One way to gain access to the analog "+" and "−" busses is through pins 5 ("+") and 1 ("−") of the "D" connectors, J1 and J2, at the back of the rack. As observed from the rear of the rack mount, pins 1 through 13 are the top row of pins going from right to left. A linearization code voltage also needs to be applied to the master module at pin 6 of the D connector, to "activate" the master module. This voltage can be between +.4 and +4 V, and is applied between pins 6 and 1 of the D connector. (Pins 1 and 2 are connected together on the mother board, and either may be used for the "−" connection.) Refer to Figure 3 for the correct test configuration using J1 or J2.

Set the DC voltage calibrator to zero and follow the zero procedure above, if necessary. Then set the DC voltage calibrator to 1.800 VDC. The master module display should indicate +1832°F (if °F display is selected) or +1000°C. The gain control, R14, on the horizontal board in the master module is used to adjust the gain (schematic X87-1003).

5.0 SYSTEM OPERATION VERIFICATION

5.1 Test Verification

Pressing the TEST pushbutton will place all normal modules in the alarm condition, indicated by the front-panel alarm LED. If the horn is not already on, pressing TEST will activate it. The reflash and CTA relays will be energized, if no points were in alarm when TEST was pressed. The TEST pushbutton is enabled only when the BYPASS switch is in the BYPASS position. This is indicated by a flashing LED on the front of the master module. The relays in the monitor modules will not switch over to the alarm condition when the BYPASS switch is in the BYPASS position.

5.2 Silence Verification

Pressing the SILENCE pushbutton will silence the horn. No other changes will occur. The horn can be reactivated either by a new alarm occurring or by pressing TEST after the system is reset.

5.3 Reset Verification

After the test sequence is initiated, pressing the RESET switch will return to normal all points whose inputs are normal. If all inputs are normal, pressing RESET will also return the CTA and reflash relays to their normal condition.

5.4 Auxiliary Relay Operation Verification

Initiate the test function by setting the BYPASS switch to the BYPASS position and pressing the TEST switch. Now, before pressing RESET (SILENCE may be pressed), set the BYPASS switch to the OFF position. The system's auxiliary relay contacts will now switch over to the alarm condition. **Note:** This switch-over will occur only if the relays are operating in the latching mode ("L" jumper plug installed on the monitor board[s]). The relays will remain in the normal condition if the "NL" jumper is installed and the input to the monitor module is normal.

5.5 Setpoint Alarm Verification

Proper operation of a setpoint may be verified after the input sensor wiring has been connected to the monitor module. Remove the monitor module and examine the position of the HI/LO setpoint switch of the module to be tested. Reinstall the monitor module.

An alarm is simulated by adjusting the setpoint below the input for a high alarm or above the input for a low alarm. Observe the input value by pressing the INPUT switch on the module being tested. Next, read the setpoint value by pressing the SETPOINT switch. Maintain the SETPOINT switch pressed and adjust the setpoint down (or up for low setpoint operation). When the setpoint equals the input, the module should indicate an alarm condition. Pressing the SILENCE pushbutton will silence the horn and, after the setpoint has returned to normal, pressing RESET will reset the module.

Condition		Input	Alarm LED	Alarm Relay	Horn Relay	CTA Relay	Re-Flash Relay
Normal		Normal	Off	Off	Off	Off	Off
Alarm	First	Abnormal	Flash	On	On	On	On
	Subsequent	Abnormal	Flash	On	On	On	On-Pulse Off-On
Silence		Abnormal	Flash	On	Off	On	On
Reset		Abnormal	Flash	On	Off	On	On
Return to Normal		Normal	Flash	On*	Off	On	On
Reset		Normal	Off	Off	Off	Off	Off
Test		Normal	Off	Off	Off	Off	Off
Test with S.D. Bypass		Normal	Flash	Off	On	On	On
Reset		Normal	Off	Off	Off	Off	Off

*Alarm relay on if in latching (L) operation. Relay is off in non-latching (NL) operation.

Table 3: X87 Manual Reset Sequence

Condition		Input	Alarm LED	Alarm Relay	Horn Relay	CTA Relay	Re-Flash Relay
Normal		Normal	Off	Off	Off	Off	Off
Alarm	First	Abnormal	Flash	On	On	On	On
	Subsequent	Abnormal	On	On	On	On	On-Pulse Off-On
Silence	First	Abnormal	Flash	On	Off	On	On
	Subsequent	Abnormal	On	On	Off	On	On
Reset	First	Abnormal	Flash	On	Off	On	On
	Subsequent	Abnormal	On	On	Off	On	On
Return to Normal	First	Normal	Flash	On*	Off	On	On
	Subsequent	Normal	On	On*	Off	On	On
Reset	First	Normal	Off	Off	Off	Off	Off
	Subsequent	Normal	Off	Off	Off	Off	Off
Test		Normal	Off	Off	Off	Off	Off
Test with S.D. Bypass		Normal	Flash	Off	On	On	On
Reset		Normal	Off	Off	Off	Off	Off

*Alarm relay on if in latching (L) operation. Relay is off if in non-latching (NL) operation.

Table 4: X87 First-Alert Manual Reset Sequence

5.6 Input Failure Verification

An input sensor failure can be simulated by removing an input lead at the rear terminals of the monitor module. Shorting the input terminals of an RTD input will also cause an input failure indication. The front-panel SENSOR fail LED will illuminate and the system horn will sound. Also, the monitor's alarm function will be inhibited, if this option is included. (An internal jumper plug labeled "NML" or "INH" determines whether or not the alarm function will be inhibited.) When the input is properly re-connected, the monitor module will return to its normal operating condition. See section 3.4 Wiring Instructions for procedure to avoid shutdown when repairing an open input condition.

5.7 Removal of Input Module from System

It is recommended that the shutdown BYPASS switch on the master module be put in the BYPASS position before removing or inserting an input module from an on-line system. This prevents any auxiliary relays from switching over into the alarm or shutdown condition. After inserting the module, press RESET and then return the shutdown BYPASS switch to the OFF position. **Note:** The sensor fail circuit will activate the system's horn relay, so it will be necessary to silence the horn after insertion of an input module.

6.0 CIRCUIT DESCRIPTION

6.1 Input Module Models X87-300, -400, -470, -471, -472, -473 (Schematic X87-1000, -1016)

The Model X87 utilizes two input modules, one for temperature and process monitoring functions and one for vibration and position monitoring. The X87-1000 printed circuit board is used for Models X87-300 and X87-400 Universal Mother Boards. The X87-1016 printed circuit board is used for the X87-470 series Vibration and Position input functions. The modules are identical and have the same nomenclature with the exception of an additional positive or negative 24 V power supply on the X87-1016 printed circuit board. A different transformer is used for T2, and D33 and D34 are added. The 24 V is accessible at screw terminal 3 with its return common to the input signal, on the X87-470 series vibration monitors.

The input module functions with a plug-in signal-conditioning amplifier and, optionally, a plug-in transmitter, to provide the monitoring functions for an input. The input module provides isolated power for the input amplifier and transmitter, signal isolation circuits, setpoint circuits with alarm logic and auxiliary relay contact outputs.

Each input module has its own power supply circuits, which are derived from a DC-DC converter power supply. The integrated circuit, U14, C25 and R77, form an oscillator that drives VMOS transistor switches Q5 and Q6. The switches are alternately turned on and off at a frequency of about 80 to 110 kHz. This causes currents of alternate polarity to flow through the primary windings of non-saturating transformer T2.

The isolated voltages that power the plug-in input amplifiers are derived from windings 8-9 and 10-11. These voltages, +V1, −V1, +VR1 and −VR1, are approximately +9 VDC, −9 VDC, +2.5 VDC and −2.5 VDC. The +2.5 V and −2.5 V reference voltages are provided by reference Zener diodes D28 and D27.

The plug-in transmitter voltages are provided by windings 4-5 and 7-8. These are +V3, +VR3 and −VR3 (approximately +25 V, +5 V and −5 V.

Transformer winding 9-8 provides a voltage from which a − V reference voltage is derived by R75 and D31. Amplifier U13 and its associated components make up a stable +12 VDC supply. These voltages are referenced to the system's 24 V return (V−) and are utilized in the setpoint and logic circuits.

The amplifier output signal from pin 9 of the plug-in circuit board is modulated by field-effect transistor Q2 and the primary of transformer T1. This signal is demodulated from winding 5-6 of T1 by Q1, R30 and C6 and referenced to the system V−. The demodulated signal at the output of buffer amplifier U1-A is applied to the A and B setpoint circuits. The two setpoint and logic circuits are similar and only the A setpoint circuit will be described in detail.

The setpoint comparator, U1-B, discerns the difference in the magnitude of the voltages applied to resistors R1 and R2. If the signal voltage from U1-A, applied to R1, is smaller than the setpoint voltage applied to R2, the output of U1-B will be high (approximately +11 V) (high setpoint). The output of U1-B goes low (approximately −11 V) when the signal voltage is higher than the setpoint voltage. Some setpoint hysteresis, or *deadband*, is provided by D7, R19 (or D8 and R20), R29 and R56. Potentiometer R56 adjusts the hysteresis and has a graduated scale screened on the printed circuit board. The setpoint voltage from buffer amplifier U1-C is applied to R2 and to inverting amplifier U1-D. The output of U1-D is available to be selected for display on the master module when the A setpoint switch on the front-panel is pressed.

The output of U8-B is low when the input is normal and high when the input is abnormal (setpoint exceeded). When the output of U8-B goes high, the output of U9-D goes high; the positive-going signal at U9-D, pin 4, clocks flip/flop U10-A. When this clock signal is received at U10-A, the output of U10-A, pin 13, goes high (alarm condition). The output of U10-A, pin 13, is routed to several points on the circuit board. It can be connected, via a plug-in jumper, to U9-C, providing a "latching" signal for alarm relay K1. It also provides a clock signal, through C13, to flip/flop U10-B. (We will return to U10-B.) It goes to AND gate U9-A and to OR gate U5-B, through which the CTA bus is activated. The signal through C13 also is applied to OR gate U5-A, which causes the horn bus to be pulsed.

If the module is connected to one or more other modules in the first-out group, the voltage level at connector pin C20 can be either high (the module is first in alarm) or low (one or more inputs in the group are already in alarm). The voltage level at connector pin C20 is applied, through R51, to the D input of U10-B. If this voltage is high, the clock pulse received when U10-A went into alarm causes U10-B, pin 1, to go high and pin 2 to go low. The signal at U10-B, pin 1, is applied to AND gate U9-B and to transistor Q4, which pulls down the ME terminal, causing any other alarms in its group to come in as subsequent alarms.

The low signal from U10-B, pin 2, inhibits AND gate U9-A, preventing alarm LED3 from illuminating steadily. At the same time, AND gate U9-B is receiving a high signal at pin 1 and a flash signal, from the flash bus, at pin 2. Pin 3 of U9-B therefore, goes high and low at the flash rate and this signal is transmitted through U8-D

to LED driver U12-B, causing a flashing alarm LED (a "first-up" indication).

If ME input/output pin C20 was low when the module went into alarm, the clock pulse received at U10-B has no effect and U10-B, pin 1 stays low and pin 2 stays high. The high level at pin 2, routed to U9-A, pin 12, and the high level at U9-A, pin 13, causes a high level at U9-A, pin 11, and a steady illumination of alarm indicator LED3 (subsequent alarm).

The output of U8-B is routed to one input of U4-A and the reset bus is connected to the other input. An alarm condition—a high level at U8-B, pin 10—inhibits the reset signal from being transmitted through U4-A. Thus, flip/flops U10-A and U10-B can be reset only after the module's input has returned to its normal condition.

Since the B setpoint operates in a similar manner, the description of the A setpoint circuitry is applicable to the B setpoint with appropriate changes in the nomenclature.

The sensor-fail-detection circuits, located on the input amplifier modules, drive opto-isolator U3 and front-panel indicator LED1. A sensor-fail condition causes a low-level signal at the output of U8-C, which can be used to inhibit either or both setpoints by placing a plug-in jumper in the A and B INH (inhibit) positions. The sensor-fail signal also causes the system's horn relay to switch over through U5-C and U12-C. Indicator LED1 is normally green and changes to a red color to indicate a sensor-fail condition.

The analog signals are selected to be switched to the analog "+"and linearization code busses, through the quad switch circuits in U2. The front-panel INPUT, SETPOINT A and SETPOINT B switches provide control signals, which cause either of these parameters to be routed to the master module for display. Resistor R13 is included in the circuit to provide additional isolation between modules, in case two or more modules are inadvertently selected at the same time. If the remote select option is installed, the input and setpoint signals can be selected for display by the application of a positive voltage (referenced to the system's V−) in the range of 16-50 VDC via elements D2, D4 and D6, which are constant current devices and allow readout selection over this broad voltage range.

The linearization code value is determined by resistors R26 and R7. This value actuates a specific linearizer board in the master module for each type of input sensor. (Up to three different sensors can be utilized in one system.)

6.2 Thermocouple, mV, mA Amplifier Models X87-S10, -S20 (Schematic X87-1002)

The thermocouple, mV or mA plug-in amplifier board contains the input amplifier and sensor-fail-detection circuits. The amplifier consists of integrated circuit U1 and its associated components. The input signal enters the card at connector pins 6 (+) and 7 (−). Thermocouple amplifiers require a cold junction compensation resistor, which is located on the terminal strip on the chassis connector panel. The reference junction resistor connects to the plug-in card via connector pins 7 and 8. The input voltage is filtered by R3, C2, R15 and C8, and applied to low-drift operational amplifier U1, which is connected in a non-inverting gain configuration. The gain-determining resistors are R8, R22 and the gain adjust control R20. The gain resistor values are chosen to give an output signal level of 1 mV per degree Fahrenheit average over the reference segment of the thermocouple range. The reference segment is a range of temperature where no gain linearization is done in the master module. Table 5 gives the nominal gain of the amplifier for each thermocouple and the linearization code voltage value. Potentiometer R1 is provided to allow adjustment of the circuit's zero offset voltage.

Thermocouple	Ref. Segment	Amp. Gain	Lin. Code V
E	−50 to 0°C	32.30	1.6 VDC
J	−50 to 0°C	37.02	2.0 VDC
K	−50 to 0°C	47.64	2.4 VDC
T	−20 to 20°C	46.57	2.8 VDC
R	250 to 340°C	185.70	3.2 VDC
S	150 to 230°C	215.30	3.6 VDC

Table 5

The input-failure-detection circuit consists of U2-A and U2-B and associated components. The output of an oscillator, U2-A and its associated components, is coupled to the input of the board through capacitor C7. When an input is connected (a low impedance), the AC signal at the junction of R14 and C7 will be very small. If the impedance of the input is high enough, the AC signal will increase and be rectified and filtered by D1 and C6 and applied to the "−" input of comparator U2-B. When the impedance of the input source is high enough or when the input is open, the voltage at the "−" input of U2-B will be higher than the voltage at the "+" input, causing the output to go to a negative value near −V1. This will cause the front-panel SENSOR fail LED to change from a green to a red color. The output of U2-B is routed to the input module's mother board via J1, pin 10, causing the system horn to sound and, optionally, inhibiting the setpoint(s).

6.3 RTD Amplifier Model X87-S00 (Schematic X87-1001)

The plug-in RTD amplifier board contains the amplifier and a sensor-fail-detection circuit. The amplifier circuit consists of dual-operational

amplifier U1-A and U1-B and associated components. The three-wire RTD input enters the card at connector pins 6 (+), 7 (−) and 8 (COM). If a two-wire RTD is used, the "−" and COM inputs must be jumpered together at the terminal strips at the rear of the chassis. A current source, Q1, and associated componets supply 1 mA to the RTD (5 mA for copper RTDs). Another current source, made up of Q2 and associated components, supplies 1 mA to the "−" RTD lead for lead resistance compensation. Both currents return to the module through the RTD COM lead to connector pin 8.

The input voltage at connector pin 6 is filtered by R4 and C2 and applied to the "+" input of the differential amplifier, made up of U1-A and U1B.

The voltage from the slider of the zero control, R1, is applied to the "−" input of the differential amplifier. The gain of the amplifier is determined by resistors R10, R11, R18, R19, R20 and R21. The gain resistor values are chosen to give an average output signal of 1 mV per degree Fahrenheit over the reference segment of the RTD range. The reference segment is a range of temperature when no gain linearization is done in the master module. Table 6 gives the nominal gain of the amplifier for each RTD and the linearization code voltage value. Potentiometer R1 is provided to allow adjustment of the circuit's zero offset voltage (balances the input bridge circuit at 0°C).

(0°C Value) RTD	Ref. Segment	Amp. Gain	Lin. Code
100.0Ω Pt	−80 to 20°C	4.496	.4 V
120.0Ω Ni	−50 to 0°C	2.662	.8 V
9.035Ω Cu	N/A	9.321	1.2 V
10.00Ω Cu	N/A	8.547	1.2 V

Table 6

A circuit, which detects abnormal conditions at the RTD (e.g., a shorted or open RTD), is included on the RTD amplifier board. The sensor-failure-detection circuit consists of a dual comparator, U2-A, U2-B and associated components. The comparators monitor the signal at the "+" input to the amplifier. If this voltage goes outside upper or lower limits set at the comparators, U2-B's output will change from a positive value to a negative value, causing the front-panel SENSOR fail LED to change from green to red. The SENSOR fail signal is routed to the input module's mother board via J1, pin 10, causing the system's horn to sound and, optionally, inhibiting the setpoint(s).

6.4 Vibration Input Amplifier, Models X87-S70, -S74, S-76 (Schematic X87-1017)

The vibration input board contains circuits that can be optionally configured for low pass, high pass or band pass filters and/or single or double integrator circuits. The integrator(s) is used when the input signal is being converted from acceleration to velocity or displacement, or from velocity to displacement. A high pass filter would normally be used with the integrator function to reduce errors, due to lower frequency emphasis by the integrator. The board also provides a precision full wave rectifier and a sensor "OK" detection circuit. The integrated circuit op amps, U2-B and U5-A, can each be independently configured as two pole filters, either low pass or high pass. In addition, U5-A can be set up as an integrator. The circuit of U5-B can be utilized as a two pole low pass filter or as an integrator. If not utilized for these functions, the amplifiers are configured to have unity gain. The op amps, U4 and U3, with their associated components, make up a precision full wave rectifier and smoothing circuit. Potentiometer R7 provides a means to adjust the gain of the circuit, and potentiometer R25 is used to "zero" the output of U3 at connector J2, pin 9.

The signal from the transducer is buffered by U2-A, and routed to the front panel test points.

The dual comparator circuit, made up of U1-A and U1-B, provides a sensor "OK" monitor. This circuit causes the "OK" indicator on the front panel of the module to illuminate red (green if normal), and sounds the system horn if the connections from the transducer are shorted or open circuited. The module alarms can be inhibited under sensor fail conditions by the placement of the J1 and J6 jumper plugs on the monitor modules main board.

6.5 Position Input Amplifier, Model X87-S78 (Schematic X87-1012)

The position input module accepts a signal from an eddy probe and probe driver assembly. The module contains an input signal conditioning and filter circuit, a gain-of-one inverting amplifier, a position-limit-detection circuit and an absolute value circuit.

The shaft axial position signal enters the card at connector pin 6, is attenuated by resistors R17 and R16, and filtered by U1-A and associated components. The DC zero signal from the eddy probe sensor representing the normal shaft position is removed by the offset circuit resistors R1 and R14 or R15. This causes the display to indicate zero, when the shaft is in the normal position, and a "+" or "−" indication representing shaft movement. Shaft movement away from the sensor can be indicated as "+" or "−" depending upon the optional use of the inverting amplifier, U1-B.

Amplifiers U2 and U3 and their associated components make up an absolute value circuit to provide four trip points, when the "+" and

"−" alert and danger setpoints can be at the same distances from the normal position.

The Model X87-S78 Position Monitor utilizes a dual comparator circuit, U4-A and U4-B, to provide an "okay" circuit monitor. This circuit causes the SENSOR indicator on the front panel to illuminate red (green is normal) and sounds the system horn when the distance between the eddy probe and the shaft is out of bounds. It can also inhibit the alert and danger alarms, when not okay, via plug-in jumpers on the mother board.

6.6 Frequency Input Signal Conditioner Model X87-S79 (Schematic X87-1018)

The Model X87-S79 Frequency Input Module accepts pulse inputs from speed sensing devices and converts the speed (RPM) rate to a proportional DC signal voltage. This scaled signal is routed to the setpoint circuits on the input module main board, and when selected, to the master module for display. The input circuitry can be configured by jumpers to accept either positive or negative pulses.

The input pulses trip a comparator, U1A, which clocks a type "D" flip-flop, U2, once for each input pulse. The flip-flop is reset by the timing circuit made up of U3,A, and its associated components, thereby providing a precise, constant pulse width of the outputs from U2. The average value of the pulses from the Q output of U2 is derived by the averaging filter composed of U3,B and associated components. Scaling is accomplished by the divider consisting of R9 and R12 and by the pulse width, which is adjusted by the span control, R7.

6.7 Transmitter Model X87-600 (Schematic X87-1004)

The printed circuit board containing the optional transmitter circuitry plugs into connector P1 on the input module's mother board. The input signal to the isolated transmitter is derived from secondary winding 7-8 of transformer T1. This signal is demodulated on the transmitter board by Q1, R3 and C2. The field-effect transistor switch, Q1, is driven by the voltage at transformer winding 6-7 of T2. The restored DC signal voltage is applied to the positive input of amplifier U1-A, which controls the output current through Q2 until the resultant circuit voltage at pin 6 of U1-A is equal to that at pin 5 (neglecting the offset voltage of U1-A). A transmitter ZERO control is provided by R2, which is accessible at the front panel of the module. Potentiometer R1 is the SPAN control, also accessible at the front panel.

6.8 Master Module Model X87-100B (Schematics X87-1003, -1005)

The master module contains a power supply, analog signal amplifiers, linearization circuit(s), power-on and power-interrupt reset and bypass circuits, horn, CTA and re-flash circuits and relays, and the system's BYPASS, TEST, SILENCE and RESET controls. A DPM is mounted to the front panel of the master module. Aside from the DPM, the master module always contains two printed circuit boards: a horizontal board (X87-1003) and a vertical board (X87-1005) and may contain one to three plug-in linearizer boards.

Printed circuit board X87-1003 (the horizontal board) contains the power supplies, amplifiers, connectors for the plug-in linearizers, power-on reset and bypass circuits, and the front-panel switch interface circuits. The power supplies consist of a +12 VDC precision regulator circuit, U1 and its associated components, and a −12 VDC regulator made up of U2, Q1 and associated components. A DC-DC converter circuit is utilized to provide a negative voltage from which the −12 VDC is derived. The non-saturating DC-DC converter is made up of U3, Q2, Q3 and transformer T1 and associated components. This circuit is similar to the one on the input module board, as explained in section 6.1.

The analog signal is routed to this board via connector J1, pin 6, and applied to amplifier U7. The input impedance of this amplifier is 499 k, as determined by resistor R40. Any signal coming from an input module has a source impedance of approximately 5 kohms, so there is a loss of signal of about 1% due to the divider action of these resistors. The gain of U7, including the input divider, is 2.7777. (A calibration of the master module using an external voltage calibrator requires the use of a series 4.99 k, 1% resistor to simulate the output impedance of the input modules.) The gain-determining resistors for U7 are R36 and R37. Potentiometer R41 provides an input zero adjustment capability.

The signal at the output of U7 is applied to inverting amplifier U6 and to any linearizing circuit boards that are plugged into J3, J4 or J5. The linearized signal at the output of U6 has a scale factor of 5 mV/°C and is routed to amplifier U5, which has a gain of .360 (°F) or .2 (°C). Also, if switch S1 is in the °F position, there is a 32°F offset added, referred to the output of U5 by resistor R33. The output of U5 is, thus, scaled to be 1 mV per degree Fahrenheit or Celsius and is applied to the DPM via a wired cable.

A second pole on switch S1 causes an annunciation of an "F" or "C" on the display to indicate the correct units displayed.

The three comparators, U4-A, U4-B and U4-C, and their associated components, function as power-on and power-interrupt detectors and momentarily activate the system's reset and bypass busses. Comparators U4-B and U4-C also provide interfacing between the front-panel BYPASS and RESET switches and their respec-

tive bus drivers, U4-F and U4-E on printed circuit board X87-1005. Transistors Q4, Q5 and Q6 provide interfacing for the front-panel TEST and SILENCE switches. When the TEST switch is pressed, base drive current for Q4 is provided through R29. The collector of Q4 then goes to approximately +12 V, providing a positive voltage through D17 to the DPM and to R27, which turns on Q5, activating the test bus. The positive voltage at the cathode of D17 initiates a test of the DPM display, whereby 1888 will be displayed, providing a test of all used segments. A closure of the SILENCE switch provides base drive current for Q6, which turns on and resets the horn flip/flop, U2A, on printed circuit board X87-1005.

The vertical printed circuit board, X87-1005, provides the interconnections to the chassis's mother board and contains the horn, CTA and re-flash relays and control circuits. This board also contains the system's flash oscillator, U1-F, and bus drivers U4-D, U4-E and U4-F. When any input module goes into the alarm condition, the horn bus is pulsed low for about 20 milliseconds. The pulse is inverted by U1-A and clocks flip/flops U2-A and U3-B on the leading edge. (The flip/flops are positive-edge triggered.) The clocking of U2-A causes the horn relay, K1, to switch over and the system's horn will sound until the SILENCE switch is pressed. Assuming that there are no other inputs already in alarm, the clock pulse has no effect on U3-B, as its $\overline{Q}$ output (pin 12) was already high. This would cause the re-flash relay, K2, to energize, except that the $\overline{Q}$ output of U3-A is normally low, which holds the input of U4-B low through D3. The $\overline{Q}$ output does go high when U3-A is clocked at the trailing edge of the horn bus pulse and the re-flash relay is energized as in the CTA relay, K3 (assuming NDE operation). If another input goes into alarm before this one is cleared, the clock pulse at U3-B will cause its output pin 12 to go low, as the "D" input from U3-A is now high. Flip/flop U3-B is automatically reset through the delay and inverting circuit consisting of R11, C7 and U1-D, after about 60 milliseconds. The re-flash relay is thereby pulsed once for each alarm that occurs with a previous alarm holding the CTA bus low. Flip/flop U2-B, which provides electronic latching for a momentary-type shutdown BYPASS switch, is not used in a standard X87 system.

6.9 Linearizer Model X87-200 (Schematic X83-1004)

The linearizer board provides gain and offset changes to amplifier U6 on the master module's horizontal printed circuit board (X87-1003). Up to three linearizer boards can be utilized in a master module, plugging into connectors J3, J4 and J5. An individual sensor linearization code, from an X87-300 or -400 input module, selects the appropriate linearizer. Comparators IC3-A and IC3-B activate the linearizer board when a specific linearization code within the voltages at pins 6 and 3 is applied to the linearization code bus. Switch Q1, normally held off by a −12 V at the comparator's output, is caused to turn on when the linearizer is in use.

The analog signal from U7 is applied through the input resistor to the summing junction of eight amplifiers in IC1 and IC2, as well as to amplifier U6 on printed circuit board X87-1003. If we assume typical operating conditions, where the linearizing segments are selected for positive signal values, the circuit description would be as follows (using IC1-A as the representative circuit). A fixed current is taken from IC1-A, pin 2, through resistor R2 and, below the break point, a smaller current is supplied to this summing junction through R1. The larger offset current through R2 causes the output of IC1-A to go positive, supplying current through CR2 to balance the currents at the summing junction. As the current through R1 becomes larger, the current required through CR2 becomes less. When the current through R1 becomes slightly larger than that going through R2, the output of IC1-A will go to a negative voltage level and start drawing current from the summing junction through R23 and CR1. When this transition from a positive voltage to a negative one occurs at pin 1 of IC1-A, this segment of the linearizer starts to modify, or *linearize*, the primary signal at U6 on printed circuit board X87-1003. The signal level at the output of IC1-A depends on the ratio of R23 to R1. The output of IC1-A is applied to amplifier U6 through R22 (jumper J2 is used) or through R22 and inverting amplifier IC4 (jumper J1 is used).

6.10 Engineering Units Linearizer Model X83-200-EU (Schematic X83-1031)

The engineering units (EU) linearizer is used when one or more of the system's inputs is in engineering units and representing measurement other than temperature. The scaling is performed in each input module for the correct display range; the EU linearizer maintains the correct display for either position of the °C/°F switch in the master module. The master module gain, when the switch is in the °F position, is maintained in the °C position for an EU display. Therefore, the EU linearizer modifies the master module gain when the °C/°F switch is in the °C position and removes the +32°F offset with no gain change when the switch is in the °F position.

The comparator, U1-A and U1-B, make up a "window" detector that responds to the EU linearization code (4.4 V) and ignores the other standard codes. When the EU code is received, the outputs of U1-A and U1-B are high, allowing switches Q1 and Q2 to turn on. One of these switches will be inhibited from turning on by the °C/°F switch on the master module. When this switch is in the °C position, the voltage at connector pin 8 is high, U1-C's output is low and U1-D's output is high. The low level (−12 V) at the output of U1-C inhibits switch Q2. Switch Q1 is on, connecting resistor R10 in parallel with resistor R19 on the master module, increasing the gain of amplifier IC2. When the °C/°F switch is in the °F position, the voltage at connector pin 8 is low, U1-C's output is high and U1-D's output is low. The low level (−12 V) at the output of U1-D inhibits switch Q1. Switch Q2 is on, connecting an offset current, through R12, to the summing junction of amplifier IC2 on the master module. This offset current represents −32 digits referred to the input of the DPM, removing the 32° offset inserted by the °C/°F switch. In addition, when U1-A and U1-B are high, transistor Q3 is turned on, putting zero volts at connector pin 9, which is routed to the °C and °F annunciator driven on the DP, causing an "E" to be displayed.

6.11 Digital Panel Meter Model X87-101 (Schematics X83-1005 and X83-1006)

The DPM consists of two boards, which are joined with "F" posts. One board contains the displays and the other has the power supply and A/D converter. Isolated power is derived from the V+ supply using a DC-DC converter, Q1, Q2, T1 and their associated components. The secondary is rectified to a positive and negative voltage and regulated to +5 V with VR1 and −5 V with Zener diode CR2.

The analog-to-digital conversion is accomplished using IC1—a 3½-digit, dual-slope, A/D converter. A stable reference voltage for the IC is taken from the +5 V supply, using precision Zener diode, CR7. Resistors R10, R11 and potentiometer R13 divide the voltage and provide a small adjustment range for calibration purposes.

IC2 and its components display the units being read: "C," "F" or "E" (Celsius, Fahrenheit, engineering units). An optional decimal will be displayed with "E." When °F is selected, the output of IC2B goes low and lights the proper segment for an "F." When °C is selected, the output of IC2A is low and a "C" is displayed. If engineering units are displayed, the EU linearizer board pulls down "C" and "F" and "E" is displayed. Also, the output of IC2C will go low and light up the decimal point, if any.

PARTS LIST—RTD AMPLIFIER

Model X87-S00

Item	Qty.	ID	Part No.	Description	Vendor
1	1		X87-1001B	Printed Circuit Board	Ronan
2	1		22-17-2102	Receptacle, Bottom Entry	Molex
3	3		4—40 × 3/16	Screws, Phillips Panhead	W. Valley
4	3		#4	Internal Tooth Lock Washer	W. Valley
5	1	R5	RC07GF470J	Resistor, ¼ W, 5%, 47 Ohms	A.B.
6	1	R4	RC07GF472J	Resistor, ¼ W, 5%, 4.7 k	A.B.
7	1	R3	RC07GF682J	Resistor, ¼ W, 5%, 6.8 k	A.B.
8	2	R12,17	RC07GF103J	Resistor, ¼ W, 5%, 10 k	A.B.
9	1	R15	RC07GF333J	Resistor, ¼ W, 5%, 33 k	A.B.
10	1	R22	RC07GF226J	Resistor, ¼ W, 5%, 22 Meg	A.B.
11	1	R16	RN55C75R0F	Resistor, 1% M.F., 75 Ohms	Mepco
12	1	R14	RN55C2491F	Resistor, 1% M.F., 2.49 k	Mepco
13	2	R18,19	RN55C4871F	Resistor, 1% M.F., 4.87 k	Mepco
14	1	R13	RN55C7321F	Resistor, 1% M.F., 7.32 k	Mepco
15	1	R20	RN55C1242F	Resistor, 1% M.F., 12.4 k	Mepco
16	6	R6,7,8,9,10,11		See Table 1	
17	2	R1,2	89PR200	Potentiometer, 200 Ohms	Beckman
18	1	R21	72PR5K	Potentiometer, 5 k	Beckman
19	2	C1,4	102R102C20	Capacitor, Disc., .001/1000 V	Sprague
20	2	C3,8	104A101C20	Capacitor, Ceramic, .1/100 V	Unitrode
21	3	C5,6,7	335A150T20	Capacitor, Tant., 3.3 mfd/15 V	Kemet

PARTS LIST—RTD AMPLIFIER

Model X87-S00

Item	Qty.	ID	Part No.	Description	Vendor
22	1	C2	685A350T20	Capacitor, Tant., 6.8 mfd/35 V	Kemet
23	1	D1	1N4148D	Diode, Signal	Motorola
24	1	D2	LM336Z2.5	Diode, Ref., 2.5 V	National
25	1	D3	1N0457A	Diode, Low Leakage	Fairchild
26	2	Q1,2	2N4249	Transistor, PNP	Kemet
27	1	U1	LM358N	Dual Op-Amp	National
28	1	U2	LM392N	Op-Amp/Comparator	National

	CU (9 Ohm)	CU (10 Ohm)	Pt	Ni
R8	499	499	2.49 k	2.49 k
R9	402	402	2.37 k	2.37 k
R6	5.11	5.11	22.1	22.1
R7	7.50	7.50	90.9	110
R10,11	25.5 k	23.2 k	10.5 k	5.36 k

Table 1: Resistors Determined by Input

PARTS LIST—THERMOCOUPLE, mA, V AMPLIFIER

Models X87-S10, -S20

Item	Qty.	ID	Part No.	Description	Vendor
1	1		X87-1002B	Printed Circuit Board	Ronan
2	1		22-17-2102	Receptacle, Bottom Entry	Molex
3	3		4—40 × 3/16	Screws, Phillips, Panhead	W. Valley
4	3		#4	Internal Tooth Lock Washer	W. Valley
5	1	R21	RC07GF102J	Resistor, ¼ W, 5%, 1 k	A.B.
6	1	R15	RC07GF472J	Resistor, ¼ W, 5%, 4.7 k	A.B.
7	1	R14	RC07GF103J	Resistor, ¼ W, 5%, 10 k	A.B.
8	1	R9	RC07GF123J	Resistor, ¼ W, 5%, 12 k	A.B.
9	3	R10,11,19	RC07GF104J	Resistor, ¼ W, 5%, 100 k	A.B.
10	2	R12,13		See Table 1	
11	1	R16	RN55C2000F	Resistor, 1% M.F., 200 Ohms	Mepco
12	1	R17	RN55C4991F	Resistor, 1% M.F., 4.99 k	Mepco
13	1	R18	RN55C1152F	Resistor, 1% M.F., 11.5 k	Mepco
14	1	R22	RN55C6492F	Resistor, 1% M.F., 64.9 k	Mepco
15	7	R2,3,4,5,6,7,8		See Table 2	
16	1	R1	89PR10K	Potentiometer, 10 k	Beckman
17	1	R20	72PR5K	Potentiometer, 5 k	Beckman
18					
19	1	C9	104A101C20	Capacitor, Ceramic, .1 mfd/100 V	Kemet
20	1	C3	102R102C20	Capacitor, Ceramic, .001 mfd/1 kV	Sprague
21	1	C1	103A101C10	Capacitor, Ceramic, .01 mfd/100 V	Kemet
22	1	C7	224R500C28	Capacitor, Ceramic, .22 mfd/50 V	Sprague
23	2	C6,10	105A350T20	Capacitor, Tant., 1 mfd/35 V	Kemet
24	2	C4,5	335A150T20	Capacitor, Tant., 3.3 mfd/35 V	Kemet
25	2	C2,8	685A350T20	Capacitor, Tant., 6.8 mfd/35 V	Kemet

PARTS LIST—THERMOCOUPLE, mA, mV AMPLIFIER

Models X87-S10, -S20

Item	Qty.	ID	Part No.	Description	Vendor
26	1	D1	1N4148D	Diode, Signal	Motorola
27	1	D2	1N0457A	Diode, Low Leakage	Fairchild
28	1	U1	μA714HC	Operational Amplifier	Fairchild
29	1	U2	LM358N	Dual Op-Amp	National

	R12	R13
Upscale	68 M	47 M
Downscale	47 M	68 M

Table 1: Selection of R12, R13 for Response to Open Input Circuit.
(Do not use when inhibit is used with sensor fail.)

	E	J	K	T	R	S	4-20 mA	1-5 V	Other Inputs
R2	28.7 k	35.7 k	45.3 k	45.3 k	324 k	274 k	*(40.2 k)	*(40.2 k)	
R3	4.7 k, 5%	4.7 k, 5%	4.7 k, 5%	4.7 k, 5%	4.7 k, 5%	4.7 k, 5%	4.7 k, 5%	499 k	
R4	Not Used	Not Used	Not Used	Not Used	Not Used	Not Used	Jumper	Jumper	
R5	Not Used	Not Used	Not Used	Not Used	Not Used	Not Used	Not Used	6.34 k	
R6	158 k	196 k	249 k	249 k	1.78 M	1.50 M	*	*	
R7	174 k	200 k	261 k	261 k	1.50 M	1.50 M	100 k	100 k	
R8	2.10 k	1.82 k	1.40 k	1.43 k	402	348	*	*	
Ref. Junc. Res. X80A209	Used	Used	Used	Used	Used	Used	Not Used	Not Used	
Ext. Cur Loop Res.	Not Used	Not Used	Not Used	Not Used	Not Used	Not Used	3.125 Ω W.W.	Not Used	

*Values determined by readout range.
Table 2: Resistors Determined by Input Type.

PARTS LIST—VIBRATION INPUT AMPLIFIER

Model X87-S70, -S73, -S74, -S75, -S76, -S77

Item	Qty.	ID	Part No.	Description	Vendor
1	1		X87-1017A	Printed Circuit Board	Ronan
2	1		22-17-2102	Receptacle Bottom Entry	Molex
3	3		4—40 × 3/16	Screw, Phillips, Panhead	W. Valley
4	3		#4 Internal Lock Washer	Lock Washer	W. Valley
5	1	R4	RC07GF470J	Resistor, ¼ W, 5% 47 Ohms	A.B.
6	1	R1	RC07GF392J	Resistor, ¼ W, 5% 3.9 k	A.B.
7	2	R2,17	RC07GF103J	Resistor, ¼ W, 5% 10 k	A.B.
8	1	R15	RC07GF104J	Resistor, ¼ W, 5% 100 k	A.B.
9	1	R9	RC07GF336J	Resistor, ¼ W, 5% 33 M	A.B.
10	1	R5	RN55C631632	Resistor, ¼ W, 1% 31.6 k	Mepco
11	1	R6	RN55C6342F	Resistor, ¼ W, 1% 63.4 k	Mepco
12	2	R19,20	RN55C2002F	Resistor, ¼ W, 1% 20 k	Mepco

PARTS LIST—VIBRATION INPUT AMPLIFIER

Model X87-S70, -S73, -S74, -S75, -S76, -S77

Item	Qty.	ID	Part No.	Description	Vendor
13	1	R8	RN55C9092F	Resistor, ¼ W, 1% 90.9 k	Mepco
14	1	R3	RN55C1003F	Resistor, ¼ W, 1% 100 k	Mepco
15	2	R25,18	62PR10K	Potentiometer, Ceramic 10 k	Beckman
16	1	R7	89PR20K	Potentiometer, Ceramic 20 k	Beckman
17	1	C3	103A101C20	Capacitor, Ceramic .01/100 V	Kemet
18	7	C1,2,4,6,8 12,13	105R500C20	Capacitor, Ceramic 1/50 V	Sprague
19	1	C9	335A150T20	Capacitor, Tantalum 3.3/15 V	Kemet
20	1	C5	685A350T10	Capacitor, Tanatalum 6.8/35 V	Kemet
21	1	C7		Not Used	
22	1		TSW-102-08-G-S-RA	Right Angle Terminal Strip, 2 Positions	Samtec
23	3	D1,2,3	1N457A	Diode, Low Leakage	Fairchild Only
24	1	U1	LM392N	Dual Comparator	National
25	2.	U2,U5	LF442CN	Dual FET Op Amp	National
26	2	U3,U4	LF411CN	FET Op Amp	National
			Use with S73 or S74 (Velocity Input) Module Only		
27	1	D4	1N5287	Diode Current Source .33 mA Nom. D4 USED ☐, NOT USED ☐	Motorola
			N1 Through N8, R21,22,23,24,C10,11, W1 and W2: as required		
			Values for Transducer "OK" Monitor		
			X87-S70 Displacement Monitor Input: M600, M606, M665, M668 Probe Driver		
28	1	R16	RN55C1001F	Resistor, ¼ W, 1% 1 k	Mepco
29	1	R11	RN55C6041F	Resistor, ¼ W, 1% 6.04 k	Mepco
30	1	R14	RN55C9091F	Resistor, ¼ W, 1% 9.09 k	Mepco
31	1	R12	RN55C2212F	Resistor, ¼ W, 1% 22.1 k	Mepco
32	1	R13	RN55C2802F	Resistor, ¼ W, 1% 28.0 k	Mepco
33	1	R10	RN55C1912F	Resistor, ¼ W, 1% 19.1 k	Mepco
			X87-S73, -S74 Velocity (Input: M85 or M86 Vel. Transducer)		
34	1	R11	RN55C7501F	Resistor, ¼ W, 1% 7.5 k	Mepco
35	1	R16	RN55C1052F	Resistor, ¼ W, 1% 10.5 k	Mepco
36	1	R12	RN55C2432F	Resistor, ¼ W, 1% 24.3 k	Mepco
37	1	R13	RN55C2552F	Resistor, ¼ W, 1% 25.5 k	Mepco
38	1	R10	RN55C1742F	Resistor, ¼ W, 1% 17.4 k	Mepco
39	1	R14	J0.500X0.125	Jumper 0.5"	Squires
			X87-S75, -S76, -S77 Acceleration (Input: M98, M99 Accelerometer)		
40	1	R16	RN55C1001F	Resistor, ¼ W, 1% 1.0 k	Mepco
41	1	R13	RN55C1822F	Resistor, ¼ W, 1% 18.2 k	Mepco
42	1	R10,14	RN55C9091F	Resistor, ¼ W, 1% 9.09 k	Mepco
43	1	R11	RN55C1622F	Resistor, ¼ W, 1% 16.2 k	Mepco
44	1	R12	RN55C8252F	Resistor, ¼ W, 1% 82.5 k	Mepco

PARTS LIST— POSITION INPUT AMPLIFIER

Model X87-S78

Item	Qty.	ID	Part No.	Description	Vendor
1	1		X87-1012	Printed Circuit Board	Ronan
2					
3	1	R10	RC07GF101J	Resistor, ¼ W, 5%, 100 ohms	A.B.
4	1	R2	RC07GF392J	Resistor, ¼ W, 5%, 3.9 k	A.B.
5	1	R21	RC07GF473J	Resistor, ¼ W, 5%, 47 k	A.B.
6	1	R22	RC07GF825J	Resistor, ¼ W, 5%, 8.2 M	A.B.
7	1	R20	RN55C3742F	Resistor, 1% M.F., 37.4 k	Mepco
8	1	R5	RN55C2433F	Resistor, 1% M.F., 243 k	Mepco
9	2	R3,4	RN55C2493F	Resistor, 1% M.F., 249 k	Mepco
10	1	R6	RN55C3743F	Resistor, 1% M.F., 374 k	Mepco
11					
12	1	R7	62PR20K	Potentiometer, 20 k	Beckman
13	2	C6,7	104A101C20	Capacitor, Ceramic, .1/100 V	Unitrode
14	1	C4	503R101C20-0	Capacitor, Ceramic, .05/100 V	Unitrode
15	1	C3	474A500C20	Capacitor, Ceramic, .47/50 V	Corning
16	2	C8,9	355A150T20	Capacitor, Tant., 3.3/15 V	Kemet
17	2	C1,2	685A350T20	Capacitor, Tant., 6.8/35 V	Kemet
18	1	D3	1N0457A	Diode, Low Leakage	Fairchild
19	1	U1	OP220GJ	Dual Op-Amp	PMI
20	1	U4	LM392N	Op-Amp/Comparator	National
21					
		Component Values Determined by Input/Output Scaling			
22	5	R1,14,15,16,17			
		Component Values Determined by Position Limits			
23	2	R18,19			
		Components Used for Inverted Signal Out			
24	1	R8	RC07GF473J	Resistor, ¼ W, 5%, 47 k	A.B.
25	1	C5		Jumper	
26	1	W1	05JUMPERS	.5 × .125 × 22 AWG PVC Jumpers	Squires
27	2	R9,10		Not Used	
		Components Used for Non-Inverted Signal Out			
28	2	R8,9	EI-17	Resistor, W.W., .05%, 11.11 k	Elliott
29	1	C5	503R101C20-0	Capacitor, Ceramic, .05/100 V	Unitrode
30	1	R10	RC07GF101J	Resistor, ¼ W, 5%, 100 ohms	A.B.
31	1	W1		Not Used	
		Components Used for Absolute Value Option			
32	3	R12,13,24	RN55C1962F	Resistor, 1% M.F., 19.6 k	Mepco
33	2	R11,23	RN55C3922F	Resistor, 1% M.F., 39.2 k	Mepco
34	2	D1,2	1N4148D	Diode, Signal	Motorola
35	2	U2,3	μA714HC	Op-Amp	Fairchild

PARTS LIST—FREQUENCY INPUT BOARD

Model X87-S79

Item	Qty.	ID	Part No.	Description	Vendor
1	1		X87-1018A	Printed Circuit Board	Ronan
2	1		22-17-2102	Receptacle, Bottom Entry	Molex
3	3		4—40 x 3/16	Screws, Phillips Panhead	W. Valley
4	3		#4	Internal Tooth Lock Washer	W. Valley
5	1		TSW-102-08-G-S-RA	Rt. Angle TC Strip, 2 Positions	Samtec
6	1	R16	RC07GF470J	Resistor, ¼ W, 5%, 47 Ohms	A.B.
7	1	R4	RC07GF821J	Resistor, ¼ W, 5%, 820 Ohms	A.B.
8	2	R17, 19	RC07GF562J	Resistor, ¼ W, 5%, 5.6 k	A.B.
9	2	R1,5	RC07GF331J	Resistor, ¼ W, 5%, 3.3 k	A.B.
10	1	R14	RC07GF273J	Resistor, ¼ W, 5%, 27 k	A.B.
11	1	R15	RC07GF334J	Resistor, ¼ W, 5%, 330 k	A.B.
12	1	R4	RN55C1101F	Resistor, ¼ W, 1% M.F., 1.1 k	Dale
13	1	R3	RN55C1003F	Resistor, ¼ W, 1% M.F., 100 k	Dale
14	1	R9	RN55C2432F	Resistor, ¼ W, 1% M.F., 24.3 k	Dale
15	1	R10	RN55C2003F	Resistor, ¼ W, 1% M.F., 200 k	Dale
16	1	R2	62PR10K	Potentiometer, Ceramic 10 k	Beckman
17	1	R8	89PR100K	Potentiometer, Ceramic 100 k	Beckman
18	1	C1	331R501M05	Capacitor, DM 330 pF	Arco
19	1	C7	104A101C20	Capacitor, Ceramic .1/100 V	Kemet
20	4	C3,4,5,6	105R500C20	Capacitor, Ceramic 1/50	Sprague
21	1	C2	102R101C20	Capacitor, Ceramic .001/100 V	Sprague
22	2	D2,3	1N457A	Diode, Low Leakage	Fairchild
23	1	D4	LM336Z-2.5	Diode, Zener 2.5 V	National
24	1	D1	LM336Z-5.0	Diode, Zener 5.0 V	National
25	1	U1	LM393N	Dual Comparator	National
26	1	U3	LF442CN	Dual Op Amp	National
27	1	U2	CD4013BE	Dual D Flip-Flop	RCA
28	1	Q1	VN0106N3	V-MOS FET	Supertex

	W1, W3	W2, W4
Positive Polarity	10 k, 5%	NOT USED
Negative Polarity	NOT USED	10 k, 5%

Table 1: Input Polarity Select.

Full Scale	C10	R6	R7	R12
800 RPM	1 μF (1)	42.2 k	50 k 89 PR	3.74 k
1,000 RPM	(105A630K10)	43.2 k	20 k 89 PR	4.99 k
1,200 RPM	(105A630K10)	34.8 k	20 k 89 PR	6.19 k
1,500 RPM	(105A630K10)	26.1 k	20 k 89 PR	8.25 k
2,000 RPM	.15 μF (2)	130 k	100 k 89 PR	845 Ohm
2,500 RPM	(154A101K10)	95.3 k	100 k 89 PR	1.07 k
3,000 RPM	(154A101K10)	95.3 k	50 k 89 PR	1.3 k
5,000 RPM	(154A101K10)	47.5 k	50 k 89 PR	2.26 k
7,500 RPM	.1 μF (3)	47.5 k	50 k 89 PR	3.48 k
10,000 RPM	(104A251K05)	43.2 k	20 k 89 PR	4.99 k
20,000 RPM	(104A251K05)	17.4 k	20 k 89 PR	12.1 k
50,000 RPM	.01 μF (4) 103A40K10	82.5 k	50 k 89 PR	2.26 k

Table 2: Values for One-Shot Timing.

	C8	C9	C11	R11, R20	R21	R18
To 5,000 RPM	.15μF 154A101K10	1 μF 105A630K10	.68 μF 684A630K10	499 k	604 k	1.5M, 5%
Over 5,000 RPM	.15 μF 154A101K10	1 μF 105A630K10	.68 μF 684A630K10	200 k	243 k	680, 5%

1. Capacitors are Roederstein Type MKC1860, 10%, 100 V.
2. Resistors, S are RN55C, 1%.

Table 3: Values for Filter Circuit.

PARTS LIST—SETPOINT RANGE SUBMODULE

Model X87-T00-( )-( )

Item	Qty.	ID	Part No.	Description	Vendor
1	1		10-600-11	Header	Aries
2	1		10-650-10	Header Cover	Aries

	9 Ohm	10 Ohm	100 Ohm	120 Ohm	E	J	K	T	R	S	EU
R24,25	225 k	261 k	56.2 k	75.0 k	14.3 k	30.9 k	18.2 k	56.2 k	5.49 k	5.49 k	
R28,27	649 k	665 k	165 k	221 k	78.7 k	118 k	88.7 k	165 k	66.5 k	66.5 k	
R26	43.2 k	43.2 k	140 k	68.1 k	31.6 k	24.3 k	19.6 k	16.2 k	13.3 k	11.3 k	

R25 and R27 used on X87-400 boards only (dual setpoint). Resistors are RN50C, 1%, met. film.

Single Setpoint ☐ Dual Setpoint ☐

Table 1: Selection of Setpoint Range and Linearization Code Resistors per Input Type.

PARTS LIST—MASTER MODULE

Model X87-100B

Item	Qty.	ID	Part No.	Description	Vendor
			Horizontal Board		
1	1		X87-1003C	Printed Circuit Board	Ronan
2	6		9707B-B-0440-4	Standoff, 1/4 inch	Amatom
3	1	R2	RC07GF100J	Resistor, ¼ W, 5%, 10 Ohms	A.B.
4	1	R9	RC07GF150J	Resistor, ¼ W, 5%, 15 Ohms	A.B.
5	1	R15	RC07GF220J	Resistor, ¼ W, 5%, 22 Ohms	A.B.
6	1	R8	RC07GF101J	Resistor, ¼ W, 5%, 100 Ohms	A.B.
7	1	R7	RC07GF102J	Resistor, ¼ W, 5%, 1 k	A.B.
8	3	R27,45,50	RC07GF182J	Resistor, ¼ W, 5%, 1.8 k	A.B.
9	11	R10,11,18,25,26,28,29, 39,43,47,49	RC07GF103J	Resistor, ¼ W, 5%, 10 k	A.B.
10	1	R44	RC07GF183J	Resistor, ¼ W, 5%, 18 k	A.B.
11	5	R19,21,23,42,48	RC07GF273J	Resistor, ¼ W, 5%, 27 k	A.B.
12	2	R24,46	RC07GF473J	Resistor, ¼ W, 5%, 47 k	A.B.
13	3	R16,20,22	RC07GF104J	Resistor, ¼ W, 5%, 100 k	A.B.
14	1	R17	RC07GF474J	Resistor, ¼ W, 5%, 470 k	A.B.
15	1	R38	RC07GF106J	Resistor, ¼ W, 5%, 10 M	A.B.
16	1	R52	RC07GF475J	Resistor, ¼ W, 5%, 4.7 M	A.B.
17	1	R1	RC20GF221J	Resistor, ½ W, 5%, 220 Ohms	A.B.
18	1	R54	RN55C7500F	Resistor, 1% M.F. 750 Ohms	Mepco
19	1	R35	RN55C9091F	Resistor, 1% M.F., 9.09 k	Mepco

PARTS LIST—MASTER MODULE

Model X87-100B

Item	Qty.	ID	Part No.	Description	Vendor
20	1	R3	RN55C9761F	Resistor, 1% M.F., 9.76 k	Mepco
21	1	R5	RN55C1332F	Resistor, 1% M.F., 13.3 k	Mepco
22	2	R4,6	RN55C2002F	Resistor, 1% M.F., 20.0 k	Mepco
23	1	R12	RN55C2942F	Resistor, 1% M.F., 29.4 k	Mepco
24	1	R33	RN55C3743F	Resistor, 1% M.F., 374 k	Mepco
25	1	R40	RN55C4993F	Resistor, 1% M.F., 499 k	Mepco
26	1	R34	RN55C1002B	Resistor, 1% M.F., 10.0 k	Mepco
27	1	R30	EI-17	Resistor, W.W., .05%, 1.00 k	Elliott
28	1	R31	EI-17	Resistor, W.W., .05%, 5.00 k	Elliott
29	1	R37	EI-17	Resistor, W.W., .05%, 6.157 k	Elliott
30	1	R32	EI-17	Resistor, W.W., .05%, 6.250 k	Elliott
31	1	R36	EI-17	Resistor, W.W., .05%, 11.11 k	Elliott
32	1	R13,14	67YR2K	Potentiometer, Trim, 2 k	Beckman
33	1	R41	67YR50K	Potentiometer, Trim, 50 k	Beckman
34	1	C4	820R501M05	Capacitor, Mica, 82 pFd	ARCO
35	1	C1	391R501M05	Capacitor, Mica, 390 pFd	ARCO
36	1	C2	102R101C20	Capacitor, Ceramic, .001/100 V	Kemet
37	3	C6,10,15	104A101C20	Capacitor, Ceramic, .1/100 V	Kemet
38	1	C14	105A350T20	Capacitor, Tant., 1/35 V	Kemet
39	7	C3,5,7,8,9,11,12	685R350T20	Capacitor, Tant., 6.8/35 V	Sprague
40	1	C13	107A400E28	Capacitor, Elect., 100/40 V	Mepco
41	3	D5,6,18	1N0457A	Diode, Low Leakage	Fairchild
42	12	D1,2,3,4,9,10,11,12, 13,14,15,16	1N4148D	Diode, Signal	Motorola
43	2	D7,8	1N4005D	Diode, Rectifier	Motorola
44	1	D17	1N0825A	Diode, Zener	Motorola
45	4	Q1,4,6,7	2N4249	Transistor, PNP	Fairchild
46	1	Q5	2N6715-5	Transistor, NPN	National
47	2	Q2,3	VN0109N3	Field-Effect Transistor	Supertex
48	1	U2	2N4392	FET N-CH	Motorola
49	1	U2	LM307N	Op-Amp	National
50	2	U5,6	μA714HC	Op-Amp	Fairchild
51	2	U7,8	LF411N	Op-Amp	National
52	1	U4	LM339N	Quad Comparator	National
53	1	U1	μA723HC	Voltage Regulator	Fairchild
54	1	U3	CD4047BE	Astable Multivibrator	RCA
55	1	T1	PE2231X	Transformer	Pulse Eng.
56	1	S1	MSSA-204N	Switch, DPDT	Alco
57	3		EB71-SB10GFV	Connector	Dale
58	1		TSW-1-05-07-G-S	Terminal Strip	Samtec
59	1		SSW-1-21-02-G-S-RA	Socket Strip	Samtec
			Vertical Board		
60	1		X87-1005A	Printed Circuit Board	Ronan
61	2	R8,10	RC07GF103J	Resistor, ¼ W, 5%, 10 k	A.B.
62	6	R2,7,12,13,14,15	RC07GF273J	Resistor, ¼ W, 5%, 27 k	A.B.
63	2	R4,9	RC07GF473J	Resistor, ¼ W, 5%, 47 k	A.B.
64	1	R5	RC07GF104J	Resistor, ¼ W, 5%, 100 k	A.B.
65	2	R1,3	RC07GF224J	Resistor, ¼ W, 5%, 220 k	A.B.
66	1	R6	RC07GF474J	Resistor, ¼ W, 5%, 470 k	A.B.
67	1	R11	RC07GF684J	Resistor, ¼ W, 5%, 680 k	A.B.

PARTS LIST—MASTER MODULE

Model X87-100B

68	5	C1,3,5,6,7	104A101C20	Capacitor, Ceramic, .1/100 V	Kemet
69	1	C2	225R350T20	Capacitor, Tant., 2.2/35 V	Sprague
70	1	C4	685R350T20	Capacitor, Tant., 6.8/35 V	Sprague
71	3	D1,2,3	1N4148D	Diode, Signal	Motorola
72	1	U1	74C14N	Hex Inverter	National
73	1	U4	ULN2004	Transistor, Driver	Sprague
74	2	U2,3	CD4013BE	Dual "D" Flip-Flop	RCA
75	3	K1,2,3	G4D212PUSTV-2DC24	Relay	Omron
76	1/3		10-89-2123	Dual Row Header, NE/NDE Position (2 pos. used; 4 pins total)	Molex
77	1		65474-004	Jumper Plug NE ☐ NDE ☐	Berg
78	1	P2	TSW-1-21-07-G-S	Terminal Strip	Samtec
79	1		100-032-053	Connector	Panduit
80	6		4—40 × 3/16	Screws, Slot Panhead	W. Valley

Standard ☐ **Delete Bypass** ☐

W1, W3, W4 not used	W1, W2, W3 not used
W2, W5 are 0.5 jumper	W4, W5 are 0.5 jumper

Table 1: Jumper Select

PARTS LIST— SINGLE-SETPOINT INPUT MODULE

Model X87-300

Item	Qty.	ID	Part No.	Description	Vendor
1	1		X87-1000C	Printed Circuit Board	Ronan
2	1		X87D16-1	Front Panel	Ronan
3	1		47-10-206-10	Captive Screw	Southco
4	1		X87C18	Handle	Ronan
5	1		X87C17	Bracket	Ronan
6	3		9707B-B-0440-4	Standoff	Amatom
7	1	P1	08-911-11	Single Row Header, Eight Positions	Aries
8	6	J2,4,5,6,7,8	10-89-1243	Dual Row Header (Cut into length of two positions each; total four pins per section; six sections required.)	Molex
9	1	P3	100-032-053	Connector	Panduit
10	5		4—40 × 3/16	Machine Screw, Slot Panhead	W. Valley
11	5		#4	Intertooth Lock Washer	W. Valley
12	1		4—40 × 3/8	Self-Tapping Machine Screw, Phillips Roundhead	W. Valley
13	1	P4	TSW-110-14-G-S	Single Row Header, Four Positions	Samtec
14	1	P2	10-911-11	Single Row Header Ten Positions	Aries
15	1		X87B23	Membrane Switch Panel	T.P.I.
16					
17	1	R49	RC07GF330J	Resistor, ¼ W, 5%, 33 Ohms	A.B.
18	1	R70	RC07GF470J	Resistor, ¼ W, 5%, 47 Ohms	A.B.

PARTS LIST— SINGLE-SETPOINT INPUT MODULE

Model X87-300

Item	Qty.	ID	Part No.	Description	Vendor
19	1	R61	RC07GF417J	Resistor, ¼ W, 5%, 470 Ohms	A.B.
20	1	R35	RC07GF821J	Resistor, ¼ W, 5%, 820 Ohms	A.B.
21	3	R6,30,69	RC07GF102J	Resistor, ¼ W, 5%, 1.0 k	A.B.
22	2	R74,75	RC07GF182J	Resistor, ¼ W, 5%, 1.8 k	A.B.
23	3	R36,37,73	RC07GF272J	Resistor, ¼ W, 5%, 2.7 k	A.B.
24	2	R32,33	RC07GF682J	Resistor, ¼ W, 5%, 6.8 k	A.B.
25	1	R12	RC07GF472J	Resistor, ¼ W, 5%, 4.7 k	A.B.
26	2	R63,64	RC07GF103J	Resistor, ¼ W, 5%, 10 k	A.B.
27	2	R50,62	RC07GF153J	Resistor, ¼ W, 5%, 15 k	A.B.
28	2	R40,42	RC07GF393J	Resistor, ¼ W, 5%, 39 k	A.B.
29	1	R38	RC07GF683J	Resistor, ¼ W, 5%, 68 k	A.B.
30	10	R15,16,17,18,21,22, 23,39,47,52	RC07GF104J	Resistor, ¼ W, 5%, 100 k	A.B.
31	4	R43,46,48,51	RC07GF224J	Resistor, ¼ W, 5%, 220 k	A.B.
32	2	R31,34	RC07GF474J	Resistor, ¼ W, 5%, 470 k	A.B.
33	1	R3	RC07GF683J	Resistor, ¼ W, 5%, 680 k	A.B.
34	1	R14	RC07GF475J	Resistor, ¼ W, 5%, 4.7 M	A.B.
35	1	R76	RC20GF150J	Resistor, ½ W, 5%, 15 Ohms	A.B.
36					
37	1	R29	RN55C1000F	Resistor, 1% M.F., 100 Ohms	Mepco
38	1	R7	RN55C4871F	Resistor, 1% M.F., 4.87 k	Mepco
39	1	R13	RN55C4991F	Resistor, 1% M.F., 4.99 k	Mepco
40	2	R72,77	RN55C2942F	Resistor, 1% M.F., 29.4 k	Mepco
41	1	R71	RN55C7152F	Resistor, 1% M.F., 71.5 k	Mepco
42	4	R8,9,10,11	RN55C9532F	Resistor, 1% M.F., 95.3 k	Mepco
43	1	R19	RN55C8063F	Resistor, 1% M.F., 806 k	Mepco
44	1	R20	RN55C1104F	Resistor, 1% M.F., 1.1 M	Mepco
45	4	R1,2,4,5	RN55C2002B	Resistor, 1% M.F., 20 k	Mepco
46	16	R25,27,44,45,53,54, 55,57,58,59,65,66,67, 68,78,80		Not Used	
47	3	R24,26,28		See Table 1	
48					
49	1	R56	91BR2K	Potentiometer, 2 k	Beckman
50	1	R79	89PR-20K	Potentiometer, 20 k	Beckman
51	1	LED1	P405W-RG2-N	Light-Emitting Diode, Red/Green	Data Disp.
52	1	LED3	P205W-BR2-N	Light-Emitting Diode, Red	Data Disp.
53					
54	4	D7,8,25,26	1N0457A	Diode, Low Leakage	Fairchild
55	16	D1,3,5,9,10,13,14,17, 19,20,21,22,23,29,30,32	1N4148D	Diode, Signal	Motorola
56	4	D11,12,15,19		Not Used	
57	2	D27,28	LM336Z2.5	Diode, Reference, 2.5 V	National
58	3	D18,24,31	LM336Z-5	Diode, Reference, 5.0 V	National
59	2	C30,32	335A150T20	Capacitor, Tant., 3.3/15 V	Kemet
60	1	C29	390R501M05	Capacitor, Mica, 39 pFd	ARCO
61	3	C7,8,25	820R501M05	Capacitor, Mica, 82 pFd	ARCO
62	7	C2,5,13,14,16,21,27	104A101C20	Capacitor, Ceramic, .1/100 V	Kemet
63	1	C3	474A500C20	Capacitor, Ceramic, .47/50 V	Corning
64	1	C9	224R251R10-1	Capacitor, Poly., .22/250 V	Mepco

PARTS LIST— SINGLE-SETPOINT INPUT MODULE

Model X87-300

Item	Qty.	ID	Part No.	Description	Vendor
65	2	C1,4	685A350T10	Capacitor, Tant., 6.8/35 V	Kemet
66	9	C6,15,17,18,19,20,24, 26,31	685R350T20	Capacitor, Tant., 6.8/35 V	Sprague
67	2	C22,23	226R150T20	Capacitor, Tant., 22/15 V	Kemet
68	1	C10	105R350T20	Capacitor, Tant., 1/35 V	Squires
69					
70	1	C28	05JUMPERS	.5 × .125 × 22 AWG PVC Jumpers	Squires
71					
72	1	Q4	2N6715-5	Transistor, NPN	National
73	2	Q5,6	VN0106N3	Transistor, VMOS	Supertex
74	2	Q1,2	2N4393	Field-Effect Transistor	Motorola
75	1	Q3		Not Used	
76	3	C11,12,18		Not Used	
77					
78	1			Jumper ("LO" position of S2 at side near S1)	
79	1	U4	CD4001BE	Quad, Two-Input NOR Gate	RCA
80	2	U7,10	CD4013BE	Dual "D" Flip-Flop	RCA
81	1	U2	CD4066BE	Quad Switch	RCA
82	1	U8	CD4070BE	Quad, Two-Input XOR Gate	RCA
83	1	U5	CD4071BE	Quad, Two-Input OR Gate	RCA
84	1	U14	CD4047BE	Astable Multivibrator	RCA
85	2	U6,9	CD4081BE	Quad, Two-Input AND Gate	RCA
86	1	U13	LM307N	Op-Amp	National
87	1	U1	LM324AN	Quad Op-Amp	National
88	1	U12	ULN2004A	Trans. Driver	Sprague
89	1	U15	μA78M18CFC or MC78M18CG	Voltage Regulator, 18 V	Fairchild
90	1	U3	MCA255	Opto-Isolator	Monsanto
91	1	U11		Not Used	
92	1	T1	PE2231X	Transformer	Pulse Eng.
93	1	T2	X83B151	Transformer, Power	Merc. Mag.
94	1	F1	362.500 (NORMJPR)	Used ☐ Jumper 0.5 inch ☐	Littlefuse
95	1	F2	362.500	Used ☐ Jumper 0.5 inch ☐	Littlefuse
96	2	F1	3529	Fuse Clips Used ☐ Not Used ☐	Keystone
97	2	F2	3529	Fuse Clips Used ☐ Not Used ☐	Keystone
98	1	K1	G4D212PUSTV 2DC24	Relay, DPDT	Omron
99	1	K2		Not Used	
100	1	S1	MSSA-204N	Switch, DPDT	Alco
101	1	S2		Not Used (Jumper "LO" positions of S2.)	
102	6		65474-004	Jumper Plugs	Berg
103	1	P5	10-0513-10	Pin Line Socket	Aries
			REMOTE SELECT OPTION		
104	3	D2,4,6	1N5287	Diode, Constant Cur.	Motorola
105					

A L ☐ / NL ☐	A NE ☐ / NDE ☐	A NO ☐ / NC ☐ } 2 ea.	A INH ☐ / NML ☐	A L ☐ / NL ☐

Table 1: Jumper Plug Positions

X87-S00 RTD	X87-1001
X87-S10 X87-S20 (T/C, mV, mA)	X87-1002

Table 2: Selection of Amplifier Assembly

X87-600-( )-( )-( ) Used ☐
PC Board X87-1004 Not Used ☐

Table 3: Plug-In Transmitter Assembly Option

PARTS LIST—DUAL-SETPOINT INPUT MODULE

Model X87-400

Item	Qty.	ID	Part No.	Description	Vendor
1	1		X87-1000C	Printed Circuit Board	Ronan
2	1		X87D16-1	Front Panel	Ronan
3	1		47-10-206-10	Captive Screw	Southco
4	1		X87C18	Handle	Ronan
5	1		X87C17	Bracket	Ronan
6	3		9707B-B-0440-4	Standoff	Amatom
7	1	P1	08-911-11	Single Row Header, Eight Positions	Aries
8	1	P5	10-0513-10	Pin Line Socket	Aries
9	10	J1,2,3,4,5,6,7, 8,9,10	10-89-1243	Dual Row Header (Cut into length of two positions each; total four pins per section; ten sections required.)	Molex
10	1	P3	100-032-053	Connector	Panduit
11	5		4—40 × 3/16	Machine Screw, Slot Panhead	W. Valley
12	5		#4	Intertooth Lock Washer	W. Valley
13	1		4—40 × 3/8	Self-Tapping Machine Screw, Phillips Roundhead	W. Valley
14	1	P4	TSW-110-14-G-S	Single Row Header, Four Positions	Samtec
15	1	P2	10-911-11	Single Row Header Ten Positions	Aries
16	1		X87B24	Membrane Switch Panel	T.P.I.
17					
18	2	R44,49	RC07GF330J	Resistor, ¼ W, 5%, 33 Ohms	A.B.
19	1	R70	RC07GF470J	Resistor, ¼ W, 5%, 47 Ohms	A.B.
20	1	R61	RC07GF471J	Resistor, ¼ W, 5%, 470 Ohms	A.B.
21	1	R35	RC07GF821J	Resistor, ¼ W, 5%, 820 Ohms	A.B.
22	3	R6,30,69	RC07GF102J	Resistor, ¼ W, 5%, 1.0 k	A.B.
23	2	R74,75	RC07GF182J	Resistor, ¼ W, 5%, 1.8 k	A.B.
24	3	R36,37,73	RC07GF272J	Resistor, ¼ W, 5%, 2.7 k	A.B.
25	2	R32,33	RC07GF682J	Resistor, ¼ W, 5%, 6.8 k	A.B.
26	1	R12	RC07GF472J	Resistor, ¼ W, 5%, 4.7 k	A.B.
27	2	R63,64	RC07GF103J	Resistor, ¼ W, 5%, 10 k	A.B.
28	3	R45,50,62	RC07GF153J	Resistor, ¼ W, 5%, 15 k	A.B.
29	2	R40,42	RC07GF393J	Resistor, ¼ W, 5%, 39 k	A.B.
30	1	R38	RC07GF683J	Resistor, ¼ W, 5%, 68 k	A.B.

PARTS LIST—DUAL-SETPOINT INPUT MODULE

Model X87-400

Item	Qty.	ID	Part No.	Description	Vendor
31	11	R15,16,17,18,21,22, 23,39,47,52,58	RC07GF104J	Resistor, ¼ W, 5%, 100 k	A.B.
32	4	R43,46,48,51	RC07GF224J	Resistor, ¼ W, 5%, 220 k	A.B.
33	2	R31,34	RC07GF474J	Resistor, ¼ W, 5%, 470 k	A.B.
34	3	R3,59,80	RC07GF684J	Resistor, ¼ W, 5%, 680 k	A.B.
35	1	R14	RC07GF475J	Resistor, ¼ W, 5%, 4.7 M	A.B.
36	1	R76	RC20GF150J	Resistor, ½ W, 5%, 15 Ohms	A.B.
37					
38	2	R29,68	RN55C1000F	Resistor, 1% M.F., 100 Ohms	Mepco
39	1	R7	RN55C4871F	Resistor, 1% M.F., 4.87 k	Mepco
40	1	R13	RN55C4991F	Resistor, 1% M.F., 4.99 k	Mepco
41	2	R72,77	RN55C2942F	Resistor, 1% M.F., 29.4 k	Mepco
42	1	R71	RN55C7152F	Resistor, 1% M.F., 71.5 k	Mepco
43	4	R8,9,10,11	RN55C9532F	Resistor, 1% M.F., 95.3 k	Mepco
44	2	R19,54	RN55C8063F	Resistor, 1% M.F., 806 k	Mepco
45	2	R20,55	RN55C1104F	Resistor, 1% M.F., 1.1 M	Mepco
46	8	R1,2,4,5,53,65, 66,67	RN55C2002B	Resistor, .1% M.F., 20 k	Mepco
47	5	R24,25,26,27,28		See Table 1	
48					
49	2	R56,57	91BR2K	Potentiometer, 2 k	Beckman
50	2	R78,79	89PR-20K	Potentiometer, 20 k	Beckman
51	1	LED1	P405W-RG2-N	Light-Emitting Diode, Red/Green	Data Disp.
52	2	LED2,3	P205W-BR2-N	Light-Emitting Diode, Red	Data Disp.
53					
54	6	D7,8,15,16,25,26	1N0457A	Diode, Low Leakage	Fairchild
55	18	D1,3,5,9,10,11,12,13, 14,17,19,20,21,22,23,29, 30,32	1N4148D	Diode, Signal	Motorola
56					
57	2	D27,28	LM336Z2.5	Diode, Reference, 2.5 V	National
58	3	D18,24,31	LM336Z-5	Diode, Reference, 5.0 V	National
59	2	C30,32	335A150T20	Capacitor, Tant., 3.3/15 V	Kemet
60	1	C29	390R501M05	Capacitor, Mica, 39 pFd	ARCO
61	3	C7,8,25	820R501M05	Capacitor, Mica, 82 pFd	ARCO
62	9	C2,5,11,1213,14,16, 21,27	104A101C20	Capacitor, Ceramic, .1/100 V	Kemet
63	2	C3,28	474A500C20	Capacitor, Ceramic, .47/50 V	Corning
64	1	C9	224R251R10-1	Capacitor, Poly., .22/250 V	Mepco
65	2	C1,4	685A350T10	Capacitor, Tant., 6.8/35 V	Kemet
66	9	C6,15,17,18,19,20,24, 26,31	685R350T20	Capacitor, Tant., 6.8/35 V	Sprague
67	2	C22,23	226R150T20	Capacitor, Tant., 22/15 V	Kemet
68	1	C10	105R350T20	Capacitor, Tant., 1/35 V	Squires
69					
70	2	Q3,4	2N6715-5	Transistor, NPN	National
71	2	Q5,6	VN0106N3	Transistor, VMOS	Supertex
72	2	Q1,2	2N4393	Field-Effect Transistor	Motorola
73					
74	1	U4	CD4001BE	Quad, Two-Input NOR Gate	RCA

PARTS LIST—DUAL-SETPOINT INPUT MODULE

Model X87-400

Item	Qty.	ID	Part No.	Description	Vendor
75	2	U7,10	CD4013BE	Dual "D" Flip-Flop	RCA
76	1	U2	CD4066BE	Quad Switch	RCA
77	1	U8	CD4070BE	Quad, Two-Input XOR Gate	RCA
78	1	U5	CD4071BE	Quad, Two-Input OR Gate	RCA
79	1	U14	CD4047BE	Astable Multivibrator	RCA
80	2	U6,9	CD4081BE	Quad, Two-Input AND Gate	RCA
81	1	U13	LM307N	Op-Amp	National
82	2	U1,11	LM324AN	Quad Op-Amp	National
83	1	U12	ULN2004	Trans. Driver	Sprague
84	1	U15	μA78M18CFC or MC78M18CG	Voltage Regulator, 18 V	Fairchild
85	1	U3	MCA255	Opto-Isolator	Monsanto
86					
87	1	T1	PE2231X	Transformer	Pulse Eng.
88	1	T2	X83B151	Transformer, Power	Merc. Mag.
89	1	F1	362.500	Used ☐ Jumper 0.5 inch ☐	Littlefuse
90	1	F2	362.500	Used ☐ Jumper 0.5 inch ☐	Littlefuse
91	2	F1	3529	Fuse Clips Used ☐ Not Used ☐	Keystone
92	2	F2	3529	Fuse Clips Used ☐ Not Used ☐	Keystone
93	2	K1,2	G4D212PUSTV 2DC24	Relay, DPDT	Omron
94	1	S1	MSSA-204N	Switch, DPDT	Alco
95	6		65474-004	Jumper Plugs	Berg
			REMOTE SELECT OPTION		
96	3	D2,4,6	1N5287	Diode, Constant Cur.	Motorola

A: L ☐ / NL ☐	A: NE ☐ / NDE ☐	A: NO ☐ / NC ☐ } 2 ea.	A: INH ☐ / NML ☐	A: L ☐ / NL ☐
B: L ☐ / NL ☐	B: NE ☐ / NDE ☐	B: NO ☐ / NC ☐ } 2 ea.	B: INH ☐ / NML ☐	B: L ☐ / NL ☐

Table 1: Jumper Plug Positions

X87-S00 RTD	X87-1001
X87-S10 X87-S20 (T/C, mV, mA)	X87-1002

Table 2: Selection of Amplifier Assembly

X87-600-( )-( )-( ) Used ☐
PC Board X87-1004 Not Used ☐

Table 3: Plug-In Transmitter Assembly Option

PARTS LIST—DUAL-SETPOINT VIBRATION INPUT MODULE

Model X87-470, -471, -472

Item	Qty.	ID	Part No.	Description	Vendor
1	1		X87-1000C	Printed Circuit Board	Ronan
2	1		X87D81-1	Front Panel	Ronan
3	1		47-10-206-10	Captive Screw	Southco
4	1		X87C18	Handle	Ronan
5	1		X87C42	Bracket	Ronan
6	1		X87C43	Bracket	Ronan
7	3		7907B-B-0440-4	Standoff	Amatom
8	1	P1	08-911-11	Single Row Header, 8 Positions	Aries
9	1	P5	10-053-10	Pin Line Socket	Aries
10	2	J1,2,3,4,5,6,7,8,9,10	10-89-1243	Dual Row Header (10 sections required—cut header into lengths of 2 positions each—4 total pins per section.)	Molex
11	1		3542-2	Pin Jack, Red (+)	Pomona
12	1		3542-0	Pin Jack, Black (−)	Pomona
13	1	P3	100-032-053	Connector	Panduit
14	5		4—40 × 3/16″	Machine Screw, Slot Pan Head	W. Valley
15	5		#4	Inter-Tooth Lock Washer	W. Valley
16	1		IDSS-02-S-06	2-Position Cable Strip	Samtec
17	1		4—40 × 3/8	Self-Tapping Machine Screw, Phillips, Round Head	W. Valley
18	1	P4	Make from TSW-110-14-G-S	Single-Row Header, 4 Positions	Samtec
19	1	P2	10-911-11	Single-Row Header, 10 Positions	Aries
20	1		X87B35-1	Membrane Switch Panel (X87-470)	T.P.I.
21	1		X87B35-2	Membrane Switch panel (X87-474, -476)	T.P.I.
22					
23	2	R44,49	RC07GF330J	Resistor, ¼ W, 5%, 33 ohms	A.B.
24	1	R70	RC07GF470J	Resistor, ¼ W, 5%, 47 ohms	A.B.
25	1	R61	RC07GF471J	Resistor, ¼ W, 5%, 470 ohms	A.B.
26	1	R35	RC07GF821J	Resistor, ¼ W, 5%, 820 ohms	A.B.
27	3	R6,30,69	RC07GF102J	Resistor, ¼ W, 5%, 1.0 k	A.B.
28	2	R74,75	RC07GF182J	Resistor, ¼ W, 5%, 1.8 k	A.B.
29	3	R36,37,73	RC07GF272J	Resistor, ¼ W, 5%, 2.7 k	A.B.
30	2	R32,33	RC07GF682J	Resistor, ¼ W, 5%, 6.8 k	A.B.
31	1	R12	RC07GF472J	Resistor, ¼ W, 5%, 4.7 k	A.B.
32	2	R63,64	RC07GF103J	Resistor, ¼ W, 5%, 10 k	A.B.
33	3	R45,50,62	RC07GF153J	Resistor, ¼ W, 5%, 15 k	A.B.
34	2	R40,42	RC07GF393J	Resistor, ¼ W, 5%, 39 k	A.B.
35	1	R38	RC07GF683J	Resistor, ¼ W, 5%, 68 k	A.B.
36	11	R15,16,17,18,21,22,23, 39,47,52,58	RC07GF104J	Resistor, ¼ W, 5%, 100 k	A.B.
37	4	R43,46,48,51	RC07GF224J	Resistor, ¼ W, 5%, 220 k	A.B.
38	2	R31,34	RC07GF474J	Resistor, ¼ W, 5%, 470 k	A.B.
39	3	R3,59,80	RC07GF684J	Resistor, ¼ W, 5%, 680 k	A.B.
40	1	R14	RC07GF475J	Resistor, ¼ W, 5%, 4.7 M	A.B.
41	1	R76	RC07GF150J	Resistor, ¼ W, 5%, 15 ohms	A.B.

PARTS LIST—DUAL-SETPOINT VIBRATION INPUT MODULE

Model X87-470, -471, -472

Item	Qty.	ID	Part No.	Description	Vendor
43	2	R29,68	RN55C1000F	Resistor, 1% M.F., 100 ohms	Mepco
44	1	R7	RN55C4871F	Resistor, 1% M.F., 4.87 k	Mepco
45	1	R13	RN55C4991F	Resistor, 1% M.F., 4.99 k	Mepco
46	2	R72,77	RN55C2942F	Resistor, 1% M.F., 29.4 k	Mepco
47	1	R71	RN55C7152F	Resistor, 1% M.F., 71.5 k	Mepco
48	4	R8,9,10,11	RN55C9532F	Resistor, 1% M.F., 95.3 k	Mepco
49	2	R19,54	RN55C8063F	Resistor, 1% M.F., 806 k	Mepco
50	2	R20,55	RN55C1104F	Resistor, 1% M.F., 1.1 M	Mepco
51	8	R1,2,4,5,53,65,66,67	RN55C2002B	Resistor, .1% M.F., 20 k	Mepco
52	5	R24,25,26,27,28		See Table 2	
53					
54	2	R56,57	91BR2K	Potentiometer, 2 k	Beckman
55	2	R78,79	89PR-20K	Potentiometer, 20 k	Beckman
56	1	LED1	P405W-RG2-N	Light-Emitting Diode, Red/Green	Data Disp.
57	2	LED2,3	P205W-BR2-N	Light-Emitting Diode, Red	Data Disp.
58					
59	6	D7,8,15,16,25,26	1N457A	Diode, Low Leakage	Fairchild
60	18	D1,3,5,9,10,11,12,13,14, 17,19,20,21,22,23,29, 30,32	1N4148D	Diode, Signal	Motorola
61	2	D27,28	LM336Z2.5	Diode, Reference, 2.5 V	National
62	3	D18,24,31	LM336Z5	Diode, Reference, 5.0 V	National
63	2	C30,32	335A150R20	Capacitor, Tant., 3.3/15	Kemet
64	1	C29	390R501M05	Capacitor, Mica, 89 pfd	Arco
65	3	C7,8,25	820R501M05	Capacitor, Mica, 82 pfd	Arco
66	9	C2,5,11,12,13,14,16, 21,27	104A101C20	Capacitor, Ceramic, .1/100 V	Kemet
67	2	C3,28	474A500C20	Capacitor, Ceramic, .47/50 V	Corning
68	1	C9	224R251R10-1	Capacitor, Polyester, .22/250	Mepco
69	2	C1,4	685A350T10	Capacitor, Tant., 6.8/35	Kemet
70	9	C5,15,17,18,19,20,24, 26,31	685R350T10	Capacitor, Tant., 6.8/35	Sprague
71	2	C22,23	226R150T20	Capacitor, Tant., .22/15	Kemet
72	1	C10	105R350T20	Capacitor, Tant., 1/35	Sprague
73					
74	2	Q1,2	2N4393	Field-Effect Transistor	Motorola
75	2	Q3,4	2N6715-5	Transistor, NPN	National
76	2	Q5,6	VN0106N3	Transistor, V-MOS	Supertex
77					
78	1	U4	CD4001BE	Quad 2-Input NOR Gate	RCA
79	2	U7,10	CD4013BE	Dual "D" Flip-Flop	RCA
80	1	U2	CD4066BE	Quad Switch	RCA
81	1	U8	CD4070BE	Quad 2-Input XOR Gate	RCA
82	1	U5	CD4071BE	Quad 2-Input OR Gate	RCA
83	1	U14	CD4047BE	Astable Multivibrator	RCA (only)
84	2	U6,9	CD4081BE	Quad 2-Input AND Gate	RCA, Motorola
85	1	U13	LM307N	Operational Amplifier	National
86	2	U1,11	LM324AN	Quad Operational Amplifier	National

PARTS LIST—DUAL-SETPOINT VIBRATION INPUT MODULE

Model X87-470, -471, -472

Item	Qty.	ID	Part No.	Description	Vendor
87	1	U12	ULN2004	Trans. Drivers	Sprague
88	1	U15	μA78M18CFC or MC78M18CG	Voltage Regulator, 18 V	Fairchild
89	1	U3	MCA255	Opto-Isolator	Monsanto
90	1	U11		Not Used	
91	1	T1	PE2231X	Transformer	Pulse Eng.
92	1	T2	X83B151	Transformer, Power	Merc. Mag.
93					
94	1	F1	362.500	Jumper 0.5″ Used ☐ Not Used ☐	Littlefuse
95	1	F2	362.500	Jumper 0.5″ Used ☐ Not Used ☐	Littlefuse
96	2	F1	3529	Fuse Clip Used ☐ Not Used ☐	Keystone
97	2	F2	3529	Fuse Clip Used ☐ Not Used ☐	Keystone
98	2	K1,2	G4D212PUSTV-2DC24	Relay, DPDT	Omron
99	2	S1,2	MSSA-204N	Switch, DPDT	Allo Switch
100	8		65474-004	Jumper Plugs	Berg
			Remote Selection Option X86-RSO		
101	3	D2,4,6	1N5287	Diode, Constant Current	Motorola

A ☐ L ☐ NL	A ☐ NE ☐ NDE	A ☐ NO ☐ NC	A ☐ INH ☐ NML
B ☐ L ☐ NL	B ☐ NE ☐ NDE	B ☐ NO ☐ NC	B ☐ INH ☐ NML

Table 1: Jumper Plug Positions

Input Type	P.C. Board
X87-S70, -S74, -S76	X87-1007

Table 2: Selection of Amplifier Assembly

X87-600-( )-( )-( ) Used ☐
PC Board X87-1004 Not Used ☐

Table 3: Plug-In Transmitter Assembly Option

PARTS LIST—DUAL-SETPOINT POSITION INPUT MODULE

Model X87-478

Item	Qty.	ID	Part No.	Description	Vendor
1	1		X87-1000C	Printed Circuit Board	Ronan
2	1		X87D81-1	Front Panel	Ronan
3	1		47-10-206-10	Captive Screw	Southco
4	1		X87C18	Handle	Ronan
5	1		X87C42	Bracket	Ronan
6	1		X87C43	Bracket	Ronan
7	3		9707B-B-0440-4	Standoff	Amatom
8	1	P1	08-911-11	Single Row Header, 8 Positions	Aries
9	1	P5	10-053-10	Pin Line Socket	Aries
10	2	J1,2,3,4,5,6,7,8,9,10	10-89-1243	Dual Row Header (10 sections required—cut header into lengths of 2 positions each—4 total pins per section.)	Molex
11	1		3542-2	Pin Jack, Red (+)	Pomona
12	1		3542-0	Pin Jack, Black (−)	Pomona
13	1	P3	100-032-053	Connector	Panduit
14	5		4—40 × 3/16″	Machine Screw, Slot Pan Head	W. Valley
15	5		#4	Inter-Tooth Lock Washer	W. Valley
16	1		IDSS-02-S-06	2-Position Cable Strip	Samtec
17	1		4—40 × 3/8	Self-Tapping Machine Screw, Phillips, Round Head	W. Valley
18	1	P4	Make from TSW-110-14-G-S	Single-Row Header, 4 Positions	Samtec
19	1	P2	10-911-11	Single-Row Header, 10 Positions	Aries
20	1		X87B35-1	Membrane Switch Panel	T.P.I.
21					
22	2	R44,49	RC07GF330J	Resistor, ¼ W, 5%, 33 ohms	A.B.
23	1	R70	RC07GF470J	Resistor, ¼ W, 5%, 47 ohms	A.B.
24	1	R61	RC07GF471J	Resistor, ¼ W, 5%, 470 ohms	A.B.
25	1	R35	RC07GF821J	Resistor, ¼ W, 5%, 820 ohms	A.B.
26	3	R6,30,69	RC07GF102J	Resistor, ¼ W, 5%, 1.0 k	A.B.
27	2	R74,75	RC07GF182J	Resistor, ¼ W, 5%, 1.8 k	A.B.
28	3	R36,37,73	RC07GF272J	Resistor, ¼ W, 5%, 2.7 k	A.B.
29	2	R32,33	RC07GF682J	Resistor, ¼ W, 5%, 6.8 k	A.B.
30	1	R12	RC07GF472J	Resistor, ¼ W, 5%, 4.7 k	A.B.
31	2	R63,64	RC07GF103J	Resistor, ¼ W, 5%, 10 k	A.B.
32	3	R45,50,62	RC07GF153J	Resistor, ¼ W, 5%, 15 k	A.B.
33	2	R40,42	RC07GF393J	Resistor, ¼ W, 5%, 39 k	A.B.
34	1	R38	RC07GF683J	Resistor, ¼ W, 5%, 68 k	A.B.
35	11	R15,16,17,18,21,22,23, 39,47,52,58	RC07GF104J	Resistor, ¼ W, 5%, 100 k	A.B.
36	4	R43,46,48,51	RC07GF224J	Resistor, ¼ W, 5%, 220 k	A.B.
37	2	R31,34	RC07GF474J	Resistor, ¼ W, 5%, 470 k	A.B.
38	3	R3,59,80	RC07GF684J	Resistor, ¼ W, 5%, 680 k	A.B.
39	1	R14	RC07GF475J	Resistor, ¼ W, 5%, 4.7 M	A.B.
40	1	R76	RC07GF150J	Resistor, ¼ W, 5%, 15 ohms	A.B.
41					
42	2	R29,68	RN55C1000F	Resistor, 1% M.F., 100 ohms	Mepco
43	1	R7	RN55C4871F	Resistor, 1% M.F., 4.87 k	Mepco
44	1	R13	RN55C4991F	Resistor, 1% M.F., 4.99 k	Mepco

PARTS LIST—DUAL-SETPOINT POSITION INPUT MODULE

Model X87-478

Item	Qty.	ID	Part No.	Description	Vendor
45	2	R72,77	RN55C2942F	Resistor, 1% M.F., 29.4 k	Mepco
46	1	R71	RN55C7152F	Resistor, 1% M.F., 71.5 k	Mepco
47	4	R8,9,10,11	RN55C9532F	Resistor, 1% M.F., 95.3 k	Mepco
48	2	R19,54	RN55C8063F	Resistor, 1% M.F., 806 k	Mepco
49	2	R20,55	RN55C1104F	Resistor, 1% M.F., 1.1 M	Mepco
50	8	R1,2,4,5,53,65,66,67	RN55C2002B	Resistor, .1% M.F., 20 k	Mepco
51	5	R24,25,26,27,28		See Table 2	
52					
53	2	R56,57	91BR2K	Potentiometer, 2 k	Beckman
54	2	R78,79	89PR-20K	Potentiometer, 20 k	Beckman
55	1	LED1	P405W-RG2-N	Light-Emitting Diode, Red/Green	Data Disp.
56	2	LED2,3	P205W-BR2-N	Light-Emitting Diode, Red	Data Disp.
57					
58	6	D7,8,15,16,25,26	1N457A	Diode, Low Leakage	Fairchild
59	18	D1,3,5,9,10,11,12,13,14, 17,19,20,21,22,23,29, 30,32	1N4148D	Diode, Signal	Motorola
60	2	D27,28	LM336Z2.5	Diode, Reference, 2.5 V	National
61	3	D18,24,31	LM336Z5	Diode, Reference, 5.0 V	National
62					
63	2	C30,32	335A150T20	Capacitor, Tant., 3.3/15	Kemet
64	1	C29	390R501M05	Capacitor, Mica, 89 pfd	Arco
65	3	C7,8,25	820R501M05	Capacitor, Mica, 82 pfd	Arco
66	9	C2,5,11,12,13,14,16, 21,27	104A101C20	Capacitor, Ceramic, .1/100 V	Kemet
67	2	C3,28	474A500C20	Capacitor, Ceramic, .47/50 V	Corning
68	1	C9	224R251R10-1	Capacitor, Polyester, .22/250	Mepco
69	2	C1,4	685A350T10	Capacitor, Tant., 6.8/35	Kemet
70	9	C5,15,17,18,19,20,24, 26,31	685R350T10	Capacitor, Tant., 6.8/35	Sprague
71	2	C22,23	226R150T20	Capacitor, Tant., .22/15	Kemet
72	1	C10	105R350T20	Capacitor, Tant., 1/35	Sprague
73					
74	2	Q1,2	2N4393	Field-Effect Transistor	Motorola
75	2	Q3,4	2N6715-5	Transistor, NPN	National
76	2	Q5,6	VN0106N3	Transistor, V-MOS	Supertex
77					
78	1	U4	CD4001BE	Quad 2-Input NOR Gate	RCA
79	2	U7,10	CD4013BE	Dual "D" Flip-Flop	RCA
80	1	U2	CD4066BE	Quad Switch	RCA
81	1	U8	CD4070BE	Quad 2-Input XOR Gate	RCA
82	1	U5	CD4071BE	Quad 2-Input OR Gate	RCA
83	1	U14	CD4047BE	Astable Multivibrator	RCA (only)
84	2	U6,9	CD4081BE	Quad 2-Input AND Gate	RCA, Motorola
85	1	U13	LM307N	Operational Amplifier	National
86	2	U1,11	LM324AN	Quad Operational Amplifier	National
87	1	U12	ULN2004	Trans. Drivers	Sprague
88	1	U15	μA78M18CFC or MC78M18CG	Voltage Regulator, 18 V	Fairchild

PARTS LIST—DUAL-SETPOINT POSITION INPUT MODULE

Model X87-478

Item	Qty.	ID	Part No.	Description	Vendor
89	1	U3	MCA255	Opto-Isolator	Monsanto
90	1	U11		Not Used	
91	1	T1	PE2231X	Transformer	Pulse Eng.
92	1	T2	X83B151	Transformer, Power	Merc. Mag.
93					
94	1	F1	362.500	Jumper 0.5″ Used ☐ Not Used ☐	Littlefuse
95	1	F2	362.500	Jumper 0.5″ Used ☐ Not Used ☐	Littlefuse
96	2	F1	3529	Fuse Clip Used ☐ Not Used ☐	Keystone
97	2	F2	3529	Fuse Clip Used ☐ Not Used ☐	Keystone
98	2	K1,2	G4D212PUSTV-2DC24	Relay, DPDT	Omron
99	2	S1,2	MSSA-204N	Switch, DPDT	Allo Switch
100	8		65474-004	Jumper Plugs	Berg
			Remote Selection Option X86-RSO		
101	3	D2,4,6	1N5287	Diode, Constant Current	Motorola

A: L ☐ / NL ☐	A: NE ☐ / NDE ☐	A: NO ☐ / NC ☐	A: INH ☐ / NML ☐
B: L ☐ / NL ☐	B: NE ☐ / NDE ☐	B: NO ☐ / NC ☐	B: INH ☐ / NML ☐

Table 1: Jumper Plug Positions

Input Type	P.C. Board
X87-S78	X87-1012

Table 2: Selection of Amplifier Assembly

X87-600-( )-( )-( ) Used ☐
PC Board X87-1004 Not Used ☐

Table 3: Plug-In Transmitter Assembly Option

NOTE: If "+" and "−" alarms are the same, reconnect end of R1 nearest to edge of board to connector P2, pin 8 and reconnect end of R53 nearest to S2 connector P2, pin 8.

PARTS LIST—TRANSMITTER

Model X87-600

Item	Qty.	ID	Part No.	Description	Vendor
1	1		X87-1004B	Printed Circuit Board	Ronan
2	3		9707B-B-0440-4	Standoff	Amatom
3	3		4—40 × 3/16	Machine Screws, Slot Panhead	W. Valley
4	1	J1	22-17-2082	Bottom Entry Connection	Molex
5					
6	1	R11	RC07GF150J	Resistor, ¼ W, 5%, 15 Ohms	A.B.
7	1	R3	RC07GF102J	Resistor, ¼ W, 5%, 1 k	A.B.
8	1	R10	RC07GF222J	Resistor, ¼ W, 5%, 2.2 k	A.B.
9					
10	1	R8	RN55C2491F	Resistor, 1% M.F., 2.49 k	Mepco
11	1	R9	RN55C75R0F	Resistor, 1% M.F., 75 Ohms	Mepco
12	1	R5	RN55C1652F	Resistor, 1% M.F., 16.5 k	Mepco
13	1	R4	RN55C4753F	Resistor, 1% M.F., 475 k	Mepco
14					
15	1	R1	89PR50	Potentiometer, 50 Ohms	Beckman
16	1	R2	89PR20K	Potentiometer, 20 k	Beckman
17					
18	1	C3	503R101C20-0	Capacitor, Disc., .05/100 V	Sprague
19	1	C4	104A101C20	Capacitor, Axial, .1/100 V	Kemet
20	1	C2	685A350T20	Capacitor, Tant., 6.8/35 V	Kemet
21	1	C1	820R501M05	Capacitor, Mica, 82 pFd	ARCO
22					
23	1	Q3	2N4249	Transistor, PNP	National
24	1	Q1	2N4393	Field-Effect Transistor	Motorola
25	1	Q2	MJE243	Transistor, NPN	Motorola
26	1		6073B	Heatsink for Q2	Thermalloy
27	1	U1	LM358N	Dual Op-Amp	National
28	3		450-3752-01-03-00 or 450-3752-01-06-00	Pin Jacks	Cambion
29					
30	1		360-0017-01-03-00	Jumper Plug	Cambion
			1-5 V OUTPUT OPTION		
31	1	R12		250 Ohms, .1%, RS-1A	
32					

R6	
R7	

Table 1: Values Determined by Transmitter Span

PARTS LIST—LINEARIZER

Model X83-200-100

Item	Qty.	ID	Part No.	Description	Vendor
1	1		X83-1004	Printed Circuit Board	Ronan
2					
3	1	R41	RC07GF103J	Resistor, ¼ W, 5% 10 k	A.B.
4	1	R42	RC07GF473J	Resistor, ¼ W, 5% 47 k	A.B.
5	1	R40	RC07GF225J	Resistor, ¼ W, 5% 2.2 M	A.B.
6	1	R12	RC07GF515J	Resistor, ¼ W, 5% 5.1 M	A.B.
7					
8	2	R38,39	RN55C1002B	Resistor, .1% M.F., 10.0 k	Mepco
9	8	R23,25,27,29,30, 32,34,36	RN55C2492	Resistor, 1% M.F., 24.9 k	Mepco
10	1	R45	RN55C8060	Resistor, 1% M.F., 806	Mepco
11	3	R3,14,21	RN55C3573	Resistor, 1% M.F., 357 k	Mepco
12					
13	1	R7	RN55C9311	Resistor, 1% M.F., 9.31 k	Mepco
14	1	R1	RN55C1962	Resistor, 1% M.F., 19.6 k	Mepco
15	1	R10	RN55C1402	Resistor, 1% M.F., 14.0 k	Mepco
16	1	R4	RN55C1432	Resistor, 1% M.F., 14.3 k	Mepco
17	1	R17	RN55C1742	Resistor, 1% M.F., 17.4 k	Mepco
18	1	R13	RN55C2942	Resistor, 1% M.F., 29.4 k	Mepco
19	1	R15	RN55C4122	Resistor, 1% M.F., 41.2 k	Mepco
20	1	R20	RN55C5492	Resistor, 1% M.F., 54.9 k	Mepco
21	2	R16,18	RN55C3573	Resistor, 1% M.F., 357 k	Mepco
22					
23	1	R37	RN55C1103	Resistor, 1% M.F., 110 k	Mepco
24	1	R35	RN55C1783	Resistor, 1% M.F., 178 k	Mepco
25	1	R9	RN55C3573	Resistor, 1% M.F., 357 k	Mepco
26	1	R33	RN55C2943	Resistor, 1% M.F., 294 k	Mepco
27	1	R5	RN55C7153	Resistor, 1% M.F., 715 k	Mepco
28	1	R31	RN55C5623	Resistor, 1% M.F., 562 k	Mepco
29	1	R22	RN55C3403	Resistor, 1% M.F., 340 k	Mepco
30	1	R28	RN55C9093	Resistor, 1% M.F., 909 k	Mepco
32	2	R24,26	RN55C1004	Resistor, 1% M.F., 1.0 M	Mepco
33					
34	1	R5	RN55C7153	Resistor, 1% M.F., 715 k	Mepco
35	4	R2,8,6,19		Not Used	
36	1	R43	RN55C1621	Resistor, 1% M.F., 1.62 k	Mepco
37	1	R44	RN55C5902	Resistor, 1% M.F., 59.0 k	Mepco
38					
39	6	J2,3,5,7,9,11	J0.500 × 0.125 PVC22	0.5"Jumper	Squires
40	6	J1,4,6,8,10,12		Not Used	
41					
42	1	C5	105R350T20	Capacitor, Tantalum, 1/35 V	Sprague
43	4	C1,2,3,4	685R350T20	Capacitor, Tantalum 6.8/35 V	Sprague
44	16	CR3,6,7,8,10,11,13, 14,15,16,17,18,19, 20,21,22	1N0457A	Diode, Low Leakage	Fairchild
45	8	CR1,2,4,5,9,12,23,24		Not Used	

PARTS LIST—LINEARIZER

Model X83-200-100

Item	Qty.	ID	Part No.	Description	Vendor
46					
47	1	Q1	MPF4392 or 2N4392	FET, N-Channel	Motorola
48	2	IC1,2	LM324N	Quad Op-Amp	National
49	1	IC3	LM393N	Dual Comparator	National
50	1	IC4	μA714HC	Op-Amp	Fairchild

PARTS LIST—LINEARIZER

Model X83-200-120

Item	Qty.	ID	Part No.	Description	Vendor
1	1		X83-1004	Printed Circuit Board	Ronan
2					
3	1	R41	RC07GF103J	Resistor, ¼ W, 5% 10 k	A.B.
4	1	R42	RC07GF473J	Resistor, ¼ W, 5% 47 k	A.B.
5	1	R40	RC07GF225J	Resistor, ¼ W, 5% 2.2 M	A.B.
6	1	R2	RC07GF155J	Resistor, ¼ W, 5% 1.5 M	A.B.
7	1	R8	RC07GF185J	Resistor, ¼ W, 5% 1.8 M	A.B.
8	1	R38		Not Used	
9	1	R39	RC07GF336J	Resistor, ¼ W, 5%, 33 M	A.B.
10	8	R23,25,27,29,30, 32,34,36	RN55C2492	Resistor, 1% M.F., 24.9 k	Mepco
11	5	R5,14,16,18,21	RN55C3573	Resistor, 1% M.F., 357 k	Mepco
12	1	R45	RN55C8060	Resistor, 1% M.F., 806 ohm	Mepco
13	1	R7	RN55C7681	Resistor, 1% M.F., 7.68 k	Mepco
14	1	R1	RN55C1102	Resistor, 1% M.F., 11.0 k	Mepco
15	1	R4	RN55C1302	Resistor, 1% M.F., 13.0 k	Mepco
16	1	R10	RN55C1432	Resistor, 1% M.F., 14.3 k	Mepco
17	1	R17	RN55C1962	Resistor, 1% M.F., 19.6 k	Mepco
18	1	R13	RN55C2672	Resistor, 1% M.F., 26.7 k	Mepco
19	1	R15	RN55C3742	Resistor, 1% M.F., 37.4 k	Mepco
20	1	R20	RN55C4872	Resistor, 1% M.F., 48.7 k	Mepco
21	1	R37	RN55C8252	Resistor, 1% M.F., 82.5 k	Mepco
22	1	R35	RN55C9532	Resistor, 1% M.F., 95.3 k	Mepco
23	1	R33	RN55C1373	Resistor, 1% M.F., 137 k	Mepco
24	1	R31	RN55C2003	Resistor, 1% M.F., 200 k	Mepco
25	1	R26	RN55C2493	Resistor, 1% M.F., 249 k	Mepco
26	1	R28	RN55C2873	Resistor, 1% M.F., 287 k	Mepco
27	1	R24	RN55C4993	Resistor, 1% M.F., 499 k	Mepco
28	1	R22	RN55C5623	Resistor, 1% M.F., 562 k	Mepco
29	1	R11	RN55C7323	Resistor, 1% M.F., 732 k	Mepco
30	4	R9,6,12,19		Not Used	
31	1	R43	RN55C2801	Resistor, 1% M.F., 2.80 k	Mepco
32	1	R44	RN55C4422	Resistor, 1% M.F., 44.2 k	Mepco
33	1	R3	RC07GF225J	Resistor, ¼ W, 5%, 2.2 M	A.B.

PARTS LIST—LINEARIZER

Model X83-200-120

Item	Qty.	ID	Part No.	Description	Vendor
34	6	J2,4,6,8,10,12	J0.500 × 0.125 PVC22	0.5″ Jumper	Squires
35	6	J1,3,5,7,9,11		Not Used	
36					
37	1	C5	105R350T20	Capacitor, Tantalum, 1/35 V	Sprague
38	4	C1,2,3,4	685R350T20	Capacitor, Tantalum, 6.8/35 V	Sprague
39					
40	16	CR1,2,4,5,7,8,10,11, 13,14,15,16,17,18,19, 20	1N0457A	Diode, Low Leakage	Fairchild
41	8	CR3,6,9,12,21,22, 23,24		Not Used	
42	1	Q1	MPF4392 or 2N4392	FET, N-Channel	Motorola
43	2	IC1,2	LM324N	Quad Op-Amp	National
44	1	IC3	LM393N	Dual Comparator	National
45	1	IC4		Not Used	

PARTS LIST—LINEARIZER

Model X83-200-E

Item	Qty.	ID	Part No.	Description	Vendor
1	1		X83-1004	Printed Circuit Board	Ronan
2					
3	1	R41	RC07GF103J	Resistor, ¼ W, 5% 10 k	A.B.
4	1	R42	RC07GF473J	Resistor, ¼ W, 5% 47 k	A.B.
5	1	R40	RC07GF225J	Resistor, ¼ W, 5% 2.2 M	A.B.
6					
7	2	R38,39	RN55C1002	Resistor, 1% M.F., 10.0 k	Mepco
8	14	R1,4,7,10,13,17,23, 25,27,29,30,32, 34,36	RN55C2492	Resistor, 1% M.F., 24.9 k	Mepco
9	2	R15,20	RN55C4992	Resistor, 1% M.F., 49.9 k	Mepco
10	1	R21	RN55C1023	Resistor, 1% M.F., 102 k	Mepco
11	1	R16	RN55C1273	Resistor, 1% M.F., 127 k	Mepco
12	1	R14	RN55C1403	Resistor, 1% M.F., 140 k	Mepco
13	1	R22	RN55C1473	Resistor, 1% M.F., 147 k	Mepco
14	1	R24	RN55C1693	Resistor, 1% M.F., 169 k	Mepco
15	1	R26	RN55C1783	Resistor, 1% M.F., 178 k	Mepco
16	1	R18	RN55C2213	Resistor, 1% M.F., 221 k	Mepco
17	1	R28	RN55C2263	Resistor, 1% M.F., 226 k	Mepco
18	1	R31	RN55C2373	Resistor, 1% M.F., 237 k	Mepco
19	1	R33	RN55C3243	Resistor, 1% M.F., 324 k	Mepco
20	1	R5	RN55C3573	Resistor, 1% M.F., 357 k	Mepco
21	1	R35	RN55C3833	Resistor, 1% M.F., 383 k	Mepco
22	1	R8	RN55C4873	Resistor, 1% M.F., 487 k	Mepco
23	1	R11	RN55C5903	Resistor, 1% M.F., 590 k	Mepco
24	1	R9	RN55C7683	Resistor, 1% M.F., 768 k	Mepco
25	1	R37	RN55C1783	Resistor, 1% M.F., 178 k	Mepco
26	1	R44	RN55C2052	Resistor, 1% M.F., 20.5 k	Mepco
27	1	R45	RN55C8060	Resistor, 1% M.F., 806 ohm	Mepco
28	1	R43	RN55C2801	Resistor, 1% M.F., 2.8 k	Mepco
29					
30	5	R2,3,6,12,19		Not Used	
31	1	C5	105R350T20	Capacitor, Tantalum, 1/35 V	Sprague
32	4	C1,2,3,4	685R350T20	Capacitor, Tantalum, 6.8/35 V	Sprague
33					
34	16	CR1,2,4,5,7,8,10, 11,13,14,15,16,17, 18,19,20	1N0457A	Diode, Low Leakage	Fairchild
35	8	CR3,6,9,12,21,22, 23,24		Not Used	
36					
37	1	Q1	MPF4392 or 2N4392	FET, N-Channel	Motorola
38	2	IC1,2	LM324N	Quad Op-Amp	National
39	1	IC3	LM393N	Dual Comparator	National
40	1	IC4	μA714HC	Op-Amp	Fairchild
41	6	J2,4,6,8,10,11	J0.500 × 0.125 PVC22	0.5" Jumper	Squires
42	6	J1,3,5,7,9,12		Not Used	

PARTS LIST—LINEARIZER

Model X83-200-J

Item	Qty.	ID	Part No.	Description	Vendor
1	1		X83-1004	Printed Circuit Board	Ronan
2					
3	1	R41	RC07GF103J	Resistor, ¼ W, 5% 10 k	A.B.
4	1	R42	RC07GF47J	Resistor, ¼ W, 5% 47 k	A.B.
5	1	R40	RC07GF225J	Resistor, ¼ W, 5% 2.2 M	A.B.
6	1	R28	RC07GF275J	Resistor, ¼ W, 5%, 2.7 M	A.B.
7					
8	2	R38,39	RN55C1002	Resistor, 1% M.F., 10.0 k	Mepco
9	13	R1,4,7,10,17,23, 25,27,29,30,32 34,36	RN55C2492	Resistor, 1% M.F., 24.9 k	Mepco
10	3	R13,15,20	RN55C4992	Resistor, 1% M.F., 49.9 k	Mepco
11	2	R18,37	RN55C1053	Resistor, 1% M.F., 105 k	Mepco
12	1	R21	RN55C1543	Resistor, 1% M.F., 154 k	Mepco
13	1	R16	RN55C1743	Resistor, 1% M.F., 174 k	Mepco
14	1	R35	RN55C1783	Resistor, 1% M.F., 178 k	Mepco
15	1	R22	RN55C1823	Resistor, 1% M.F., 182 k	Mepco
16	1	R14	RN55C2003	Resistor, 1% M.F., 200 k	Mepco
17	1	R33	RN55C2553	Resistor, 1% M.F., 250 k	Mepco
18	1	R24	RN55C2613	Resistor, 1% M.F., 261 k	Mepco
19	1	R26	RN55C4223	Resistor, 1% M.F., 422 k	Mepco
20	1	R8	RN55C4873	Resistor, 1% M.F., 487 k	Mepco
21	1	R11	RN55C4993	Resistor, 1% M.F., 499 k	Mepco
22	1	R31	RN55C5903	Resistor, 1% M.F., 590 k	Mepco
23	1	R9	RN55C7503	Resistor, 1% M.F., 750 k	Mepco
24	1	R5	RN55C3013	Resistor, 1% M.F., 301 k	Mepco
25	1	R44	RN55C1962	Resistor, 1% M.F., 19.6 k	Mepco
26	1	R45	RN55C8060	Resistor, 1% M.F., 806 ohm	Mepco
27	1	R43	RN55C3571	Resistor, 1% M.F., 3.57 k	Mepco
28					
29	5	R2,3,6,12,19		Not Used	
30	1	C5	105R350T20	Capacitor, Tantalum, 1/35 V	Sprague
36	4	C1,2,3,4	685R350T20	Capacitor, Tantalum, 6.8/35 V	Sprague
37					
38	16	CR1,2,4,5,7,8,10,11, 13,14,15,16,17,18, 19,20	1N0457A	Diode, Low Leakage	Fairchild
39	8	CR3,6,9,12,21,22, 23,24		Not Used	
40					
41	1	Q1	MPF4392 or 2N4392	FET, N-Channel	Motorola
42	2	IC1,2	LM324N	Quad Op-Amp	National
43	1	IC3	LM393N	Dual Comparator	National
44	1	IC4	μA714HC	Op-Amp	Fairchild
45	6	J2,4,6,8,10,12	J0.500 × 0.125 PVC22	0.5″ Jumper	Squires
46	6	J1,3,5,7,9,11		Not Used	

PARTS LIST—LINEARIZER

Model X83-200-K

Item	Qty.	ID	Part No.	Description	Vendor
1	1		X83-1004	Printed Circuit Board	Ronan
2					
3	1	R41	RC07GF103J	Resistor, ¼ W, 5% 10 k	A.B.
4	1	R42	RC07GF47J	Resistor, ¼ W, 5% 47 k	A.B.
5	1	R40	RC07GF225J	Resistor, ¼ W, 5% 2.2 M	A.B.
6					
7	1	R24	RN55C8253F	Resistor, 1% M.F., 825 k	Mepco
8	2	R38,39	RN55C1002	Resistor, 1% M.F., 10.0 k	Mepco
9	13	R1,4,7,10,17,23, 25,27,29,30,32 34,36	RN55C2492	Resistor, 1% M.F., 24.9 k	Mepco
10	3	R13,15,20	RN55C4992	Resistor, 1% M.F., 49.9 k	Mepco
11	2	R21	RN55C1023	Resistor, 1% M.F., 102 k	Mepco
12	1	R8	RN55C9313F	Resistor, 1% M.F., 931 k	Mepco
13	1	R37	RN55C8252	Resistor, 1% M.F., 82.5 k	Mepco
14	1	R16	RN55C1213	Resistor, 1% M.F., 121 k	Mepco
15	2	R18,33	RN55C1373	Resistor, 1% M.F., 137 k	Mepco
16	2	R14,18	RN55C1473	Resistor, 1% M.F., 147 k	Mepco
17	1	R22	RN55C1623	Resistor, 1% M.F., 162 k	Mepco
18	1	R5	RN55C2213	Resistor, 1% M.F., 221 k	Mepco
19	1	R28	RN55C2943	Resistor, 1% M.F., 294 k	Mepco
20	1	R11	RN55C3653	Resistor, 1% M.F., 365 k	Mepco
21		R26	RN55C4533	Resistor, 1% M.F., 453 k	Mepco
22	1	R31	RN55C6043	Resistor, 1% M.F., 604 k	Mepco
23	1	R35	RN55C1373	Resistor, 1% M.F., 137 k	Mepco
24	1	R44	RN55C1872	Resistor, 1% M.F., 18.7 k	Mepco
25	1	R45	RN55C8060	Resistor, 1% M.F., 806 ohm	Mepco
26	1	R43	RN55C4421	Resistor, 1% M.F., 4.42 k	Mepco
27					
28	6	R2,3,6,9,12,19		Not Used	
29	1	C5	105R350T20	Capacitor, Tantalum, 1/35 V	Sprague
30	4	C1,2,3,4	685R350T20	Capacitor, Tantalum, 6.8/35 V	Sprague
31					
32	16	CR1,2,4,5,7,8,10,11, 13,14,15,16,17,18, 19,20	1N0457A	Diode, Low Leakage	Fairchild
33	8	CR3,6,9,12,21,22, 23,24		Not Used	
34					
35	1	Q1	MPF4392 or 2N4392	FET, N-Channel	Motorola
36	2	IC1,2	LM324N	Quad Op-Amp	National
37	1	IC3	LM393N	Dual Comparator	National
38	1	IC4	μA714HC	Op-Amp	Fairchild
39	6	J2,3,6,8,9,11	J0.500 × 0.125 PVC22	0.5″ Jumper	Squires
40	6	J1,4,5,7,10,12		Not Used	

PARTS LIST—LINEARIZER

Model X83-200-T

Item	Qty.	ID	Part No.	Description	Vendor
1	1		X83-1004	Printed Circuit Board	Ronan
2					
3	1	R41	RC07GF103J	Resistor, ¼ W, 5% 10 k	A.B.
4	1	R42	RC07GF473J	Resistor, ¼ W, 5% 47 k	A.B.
5	1	R40	RC07GF225J	Resistor, ¼ W, 5% 2.2 M	A.B.
6					
7	1	R4	RN55C8251	Resistor, 1% M.F., 8.25 k	Mepco
8	1	R22	RN55C2262	Resistor, 1% M.F., 22.6 k	Mepco
9	2	R38,39	RN55C1002	Resistor, 1% M.F., 10.0 k	Mepco
10	16	R1,7,10,13,15,17, 20,23,24,25,27, 29,30,32,34,36	RN55C2492	Resistor, 1% M.F., 24.9 k	Mepco
11	1	R26	RN55C4022	Resistor, 1% M.F., 40.2 k	Mepco
12	2	R31,33	RN55C9532	Resistor, 1% M.F., 95.3 k	Mepco
13	1	R35	RN55C1333	Resistor, 1% M.F., 133 k	Mepco
14	1	R37	RN55C1693	Resistor, 1% M.F., 169 k	Mepco
15	1	R21	RN55C1823	Resistor, 1% M.F., 182 k	Mepco
16	1	R28	RN55C21Q3	Resistor, 1% M.F., 210 k	Mepco
17	1	R16	RN55C3013	Resistor, 1% M.F., 301 k	Mepco
18	1	R3	RN55C4533	Resistor, 1% M.F., 453 k	Mepco
19	2	R9,18	RN55C5493	Resistor, 1% M.F., 549 k	Mepco
20	1	R14	RN55C6043	Resistor, 1% M.F., 604 k	Mepco
21	1	R19	RN55C6813	Resistor, 1% M.F., 681 k	Mepco
22	1	R12	RN55C7873	Resistor, 1% M.F., 787 k	Mepco
23	1	R6	RN55C1004	Resistor, 1% M.F., 1 M	Mepco
24	1	R44	RN55C1822	Resistor, 1% M.F., 18.2 k	Mepco
25	1	R45	RN55C8060	Resistor, 1% M.F., 806 ohm	Mepco
26	1	R43	RN55C5231	Resistor, 1% M.F., 5.23 k	Mepco
27					
28	4	R2,5,8,11		Not Used	
29					
30	1	C5	105R350T20	Capacitor, Tantalum, 1/35 V	Sprague
31	4	C1,2,3,4	685R350T20	Capacitor, Tantalum, 6.8/35 V	Sprague
32					
33	16	CR3,6,9,12,13,14, 15,16,17,18,19, 21,20,22,23,24	1N0457A	Diode, Low Leakage	Fairchild
34	8	CR1,2,4,5,7,8,10,11		Not Used	
35	1	Q1	MPF4392 or 2N4392	FET, N-Channel	Motorola
36	2	IC1,2	LM324N	Quad Op-Amp	National
37	1	IC3	LM393N	Dual Comparator	National
38	1	IC4	μA714HC	Op-Amp	Fairchild
39	6	J2,4,6,7,9,11	J0.500 × .125 PVC22	0.5″ Jumper	Squires
40	6	J1,3,5,8,10,12		Not Used	

PARTS LIST—LINEARIZER

Model X87-200-R

Item	Qty.	ID	Part No.	Description	Vendor
1	1		X83-1004	Printed Circuit Board	Ronan
2	1	R41	RC07GF103J	Resistor, ¼ W, 5%, 10 k	A.B.
3	1	R42	RC07GF473J	Resistor, ¼ W, 5%, 47 k	A.B.
4	1	R40	RC07GF225J	Resistor, ¼ W, 5%, 2.2 Meg	A.B.
5					
6	1	R45	RN55C8060F	Resistor, 1% M.F., 806 Ohms	Mepco
7	8	R23,24,27,29,30,32,34,36	RN55C4991F	Resistor, 1% M.F., 4.99 k	Mepco
8	1	R43	RN55C6041F	Resistor, 1% M.F., 6.04 k	Mepco
9	1	R1	RN55C6651F	Resistor, 1% M.F., 6.65 k	Mepco
10	1	R7	RN55C9311F	Resistor, 1% M.F., 9.31 k	Mepco
11	1	R10	RN55C1212F	Resistor, 1% M.F., 12.1 k	Mepco
12	1	R4	RN55C1502F	Resistor, 1% M.F., 15.0 k	Mepco
13	1	R44	RN55C1742F	Resistor, 1% M.F., 17.4 k	Mepco
14	1	R17	RN55C1822F	Resistor, 1% M.F., 18.2 k	Mepco
15	1	R13	RN55C2262F	Resistor, 1% M.F., 22.6 k	Mepco
16	1	R15	RN55C2742F	Resistor, 1% M.F., 27.4 k	Mepco
17	1	R37	RN55C2872F	Resistor, 1% M.F., 28.7 k	Mepco
18	1	R20	RN55C4872F	Resistor, 1% M.F., 48.7 k	Mepco
19	1	R35	RN55C4532F	Resistor, 1% M.F., 45.3 k	Mepco
20	1	R33	RN55C5622F	Resistor, 1% M.F., 56.2 k	Mepco
21	1	R31	RN55C6982F	Resistor, 1% M.F., 69.8 k	Mepco
22	1	R28	RN55C8252F	Resistor, 1% M.F., 82.5 k	Mepco
23	1	R26	RN55C1023F	Resistor, 1% M.F., 102 k	Mepco
24	1	R24	RN55C1133F	Resistor, 1% M.F., 113 k	Mepco
25	1	R22	RN55C1243F	Resistor, 1% M.F., 124 k	Mepco
26	1	R11	RN55C5762F	Resistor, 1% M.F., 57.6 k	Mepco
27	7	R2,5,8,14,16,18,21	RN55C5492F	Resistor, 1% M.F., 54.9 k	Mepco
28	1	R39	RN55C4643F	Resistor, 1% M.F., 464 k	Mepco
29	6	R33,6,9,12,19,38		Not Used	
30					
31	6	J2,4,6,8,10,12	05JUMPERS	.5 × .125 × 22 AWG PVC Jumpers	Squires
32	6	J1,3,5,7,9,11		Not Used	
33					
34	1	C5	105R350T20	Capacitor, Tant., .1 mfd/35 V	Sprague
35	4	C1,2,3,4	685R350T20	Capacitor, Tant., 6.8 mfd/35 V	Sprague
36	16	CR1,2,4,5,7,8,10,11,13, 14,15,16,17,18,19,20	1N0457A	Diode, Low Leakage	Fairchild
37	8	CR3,6,9,12,21,22,23,24		Not Used	
38					
39	1	Q1	2N4392	Field-Effect Transistor	Motorola
40	2	IC1,2	LM324N	Quad Op-Amp	National
41	1	IC3	LM393AN	National	
42	1	IC4		Not Used (Jumper pin 6 to pin 7 of IC4)	

PARTS LIST—LINEARIZER

Model X87-200-S

Item	Qty.	ID	Part No.	Description	Vendor
1	1		X83-1004	Printed Circuit Board	Ronan
2	1	R41	RC07GF103J	Resistor, ¼ W, 5%, 10 k	A.B.
3	1	R42	RC07GF473J	Resistor, ¼ W, 5%, 47 k	A.B.
4	1	R40	RC07GF225J	Resistor, ¼ W, 5%, 2.2 Meg	A.B.
5					
6	1	R45	RN55C8060F	Resistor, 1% M.F., 806 Ohms	Mepco
7	8	R23,25,27,29,30,32,34,36	RN55C4991F	Resistor, 1% M.F., 4.99 k	Mepco
8	1	R43	RN55C6811F	Resistor, 1% M.F., 6.81 k	Mepco
9	1	R1	RN55C8871F	Resistor, 1% M.F., 8.87 k	Mepco
10	1	R7	RN55C1402F	Resistor, 1% M.F., 14.0 k	Mepco
11	1	R44	RN55C1652F	Resistor, 1% M.F., 16.5 k	Mepco
12	1	R37	RN55C8061F	Resistor, 1% M.F., 8.06 k	Mepco
13	1	R10	RN55C2102F	Resistor, 1% M.F., 21.0 k	Mepco
14	1	R4	RN55C2872F	Resistor, 1% M.F., 28.7 k	Mepco
15	1	R35	RN55C3162F	Resistor, 1% M.F., 31.6 k	Mepco
16	2	R17,33	RN55C3652F	Resistor, 1% M.F., 36.5 k	Mepco
17	1	R31	RN55C3922F	Resistor, 1% M.F., 39.2 k	Mepco
18	2	R13,28	RN55C4422F	Resistor, 1% M.F., 44.2 k	Mepco
19	1	R15	RN55C5362F	Resistor, 1% M.F., 53.6 k	Mepco
20	1	R26	RN55C5902F	Resistor, 1% M.F., 59.0 k	Mepco
21	1	R24	RN55C6492F	Resistor, 1% M.F., 64.9 k	Mepco
22	1	R22	RN55C7152F	Resistor, 1% M.F., 71.5 k	Mepco
23	1	R20	RN55C8662F	Resistor, 1% M.F., 86.6 k	Mepco
24	8	R2,5,8,11,14,16,18,21	RN55C1003F	Resistor, 1% M.F., 100 k	Mepco
25	1	R39	RN55C8872F	Resistor, 1% M.F., 887 k	Mepco
26	6	R3,6,9,12,19,38		Not Used	
27					
28	6	J1,3,5,7,9,11		Not Used	
29	6	J2,4,6,8,10,12	05JUMPERS	.5 × .125 × 22 AWG PVC Jumpers	Squires
30					
31	1	C5	105T350T20	Capacitor, Tant., 1/35 V	Sprague
32	4	C1,2,3,4	685R350T20	Capacitor, Tant., 6.8/35 V	Sprague
33	16	CR1,2,4,5,7,8,10,11,13, 14,15,16,17,18,19,20	1N0457A	Diode, Low Leakage	Fairchild
34	8	CR3,6,9,12,21,22,23,24		Not Used	
35					
36	1	Q1	2N4392	Field-Effect Transistor	Motorola
37	2	IC1,2	LM324N	Quad Op-Amp	National
38	1	IC3	LM393AN	Dual Comparator	National
39	1	IC4		Not Used (Jumper pin 6 to pin 7 of IC4)	
40					

PARTS LIST—LINEARIZER

Model X83-200-EU

Item	Qty.	ID	Part No.	Description	Vendor
1	1		X83-1031	Printed Circuit Board	Ronan
2					
3					
4					
5	1	R17	RC07GF472J	Resistor, ¼ W, 5% 4.7 k	A.B.
6	2	R1,15	RC07GF103J	Resistor, ¼ W, 5% 10.0 k	A.B.
7	1	R16	RC07GF153J	Resistor, ¼ W, 5% 15 k	A.B.
8	4	R6,9,11,14	RC07GF104J	Resistor, ¼ W, 5% 100 k	A.B.
9	1	R2	RC07GF225J	Resistor, ¼ W, 5% 2.2 M	A.B.
10					
11	1	R4	RN55C8060	Resistor, 1% M.F., 806 ohms	Mepco
12	1	R8	RN55C2211	Resistor, 1% M.F., 2.21 k	Mepco
13	1	R5	RN55C8451	Resistor, 1% M.F., 8.45 k	Mepco
14	1	R3	RN55C1502	Resistor, 1% M.F., 15.0 k	Mepco
15	1	R7	RN55C1303	Resistor, 1% M.F., 130 k	Mepco
16	1	R12	RN55C3743	Resistor, 1% M.F., 374 k	Mepco
17	1	R13	RN55C1182	Resistor, 1% M.F., 11.8 k	Mepco
18					
19	1	R10	EI17	Resistor, W.W., 12.45 k ± .1%	Elliott
20					
21	1	C1	105R350T10	Capacitor, Tantalum, 1/35 V	Sprague
22	2	C2,3	685R350T10	Capacitor, Tantalum, 6.8/35 V	Sprague
23					
24	4	D1,2,3,4	1N4148D	Diode, Signal	Fairchild
25					
26	2	Q12,	2N4392	FET, N-Channel	Motorola
27	1	Q3	2N6715	Transistor, NPN	National
28	1	U1	LM339N	Quad Comparator	National

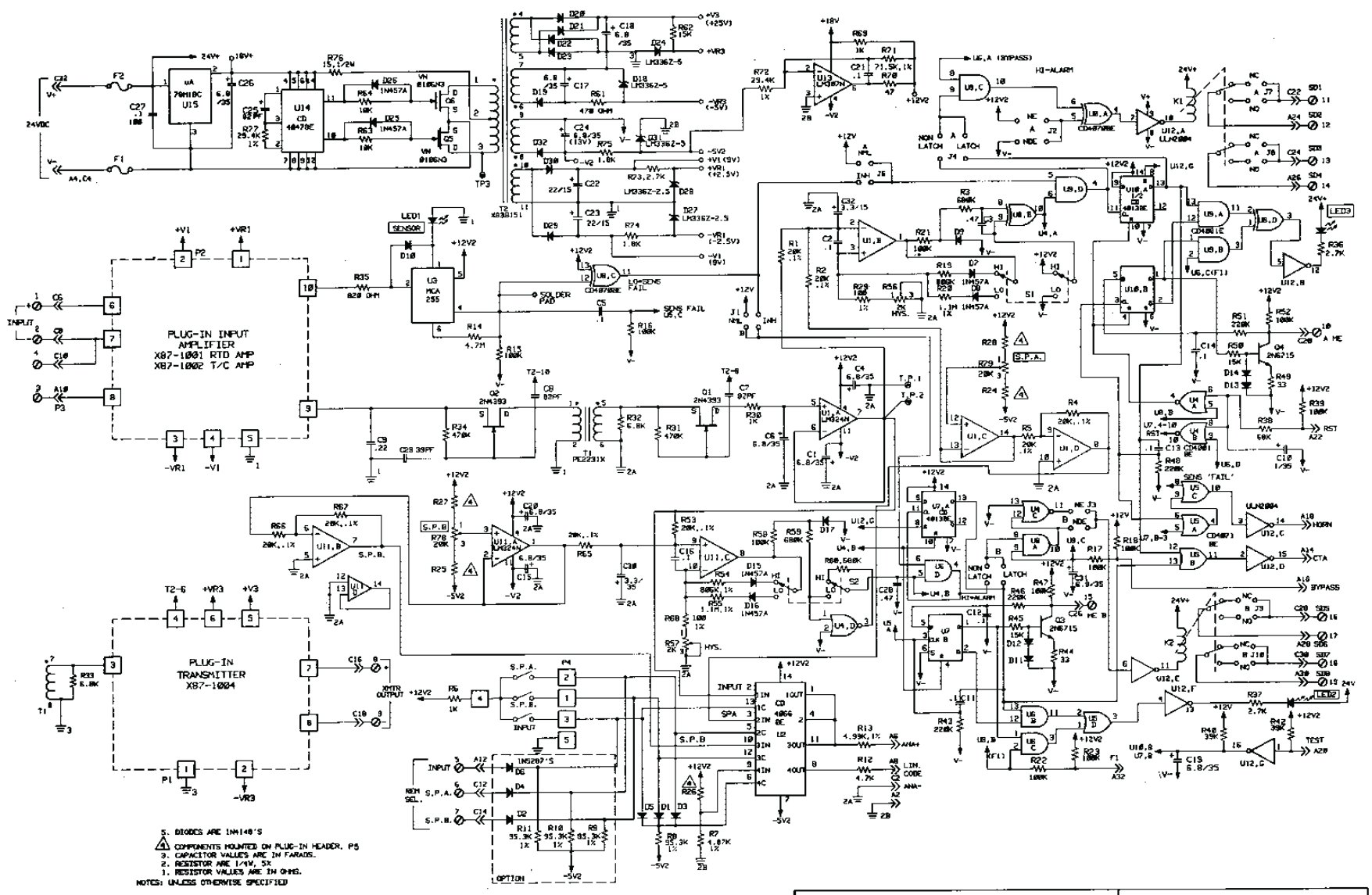

SCHEMATIC
INPUT MODULE
MODELS X87-300, -400, -470,
-474, -476, -478

RONAN

DRAWING NO.	REV.
X87-1000	2

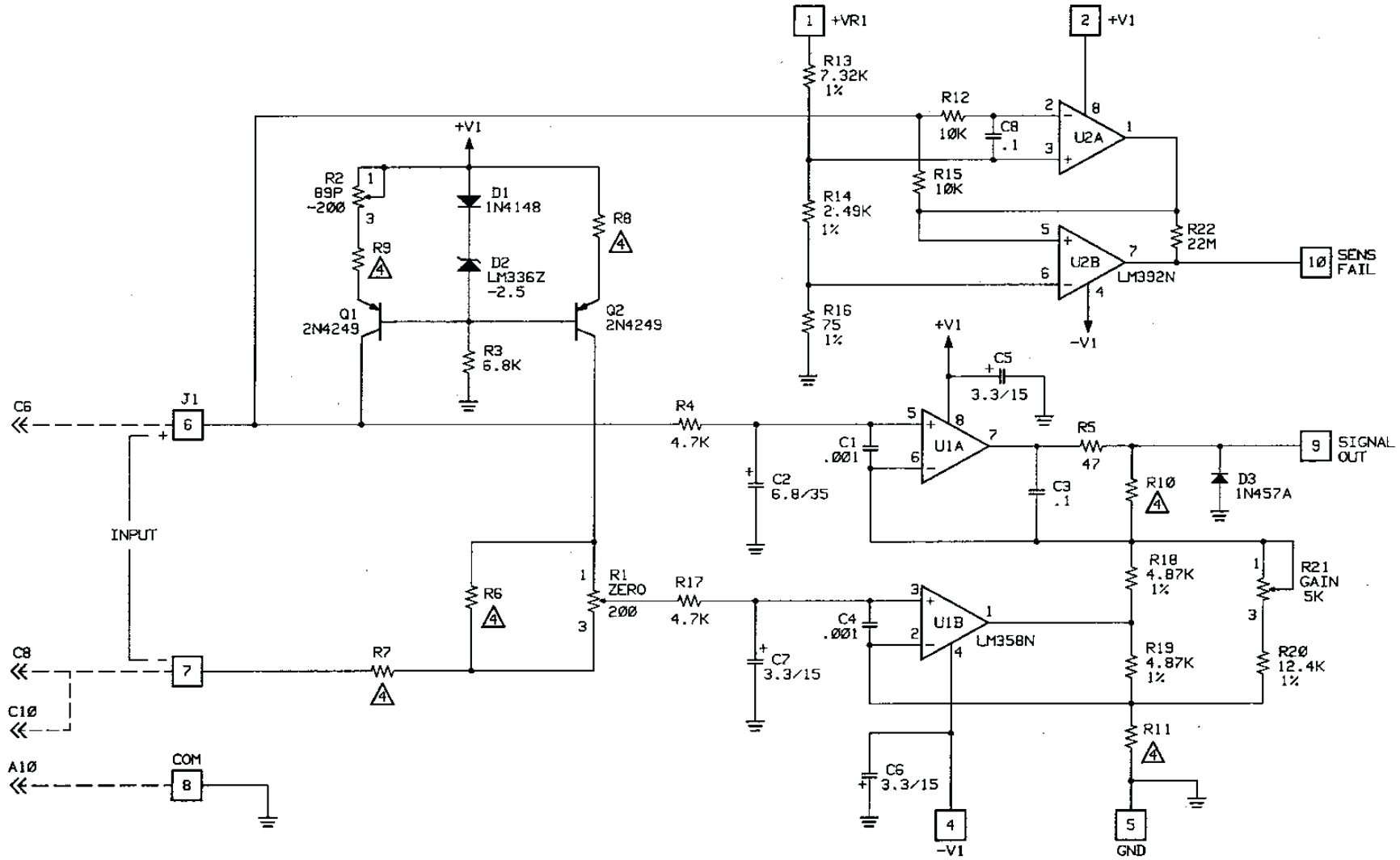

5 J1 PLUGS INTO P.C. BOARD X87-1000
4 COMPONENTS DETERMINED BY INPUT
3. CAPACITOR VALUES ARE IN FARADS
2. RESISTORS ARE 1/4W, 5%
1. RESISTOR VALUES ARE IN OHMS
NOTES: UNLESS OTHERWISE SPECIFIED

SCHEMATIC RTD AMPLIFIER MODEL X87-S00	RONAN	
	DRAWING NO. X87-1001	REV. 2

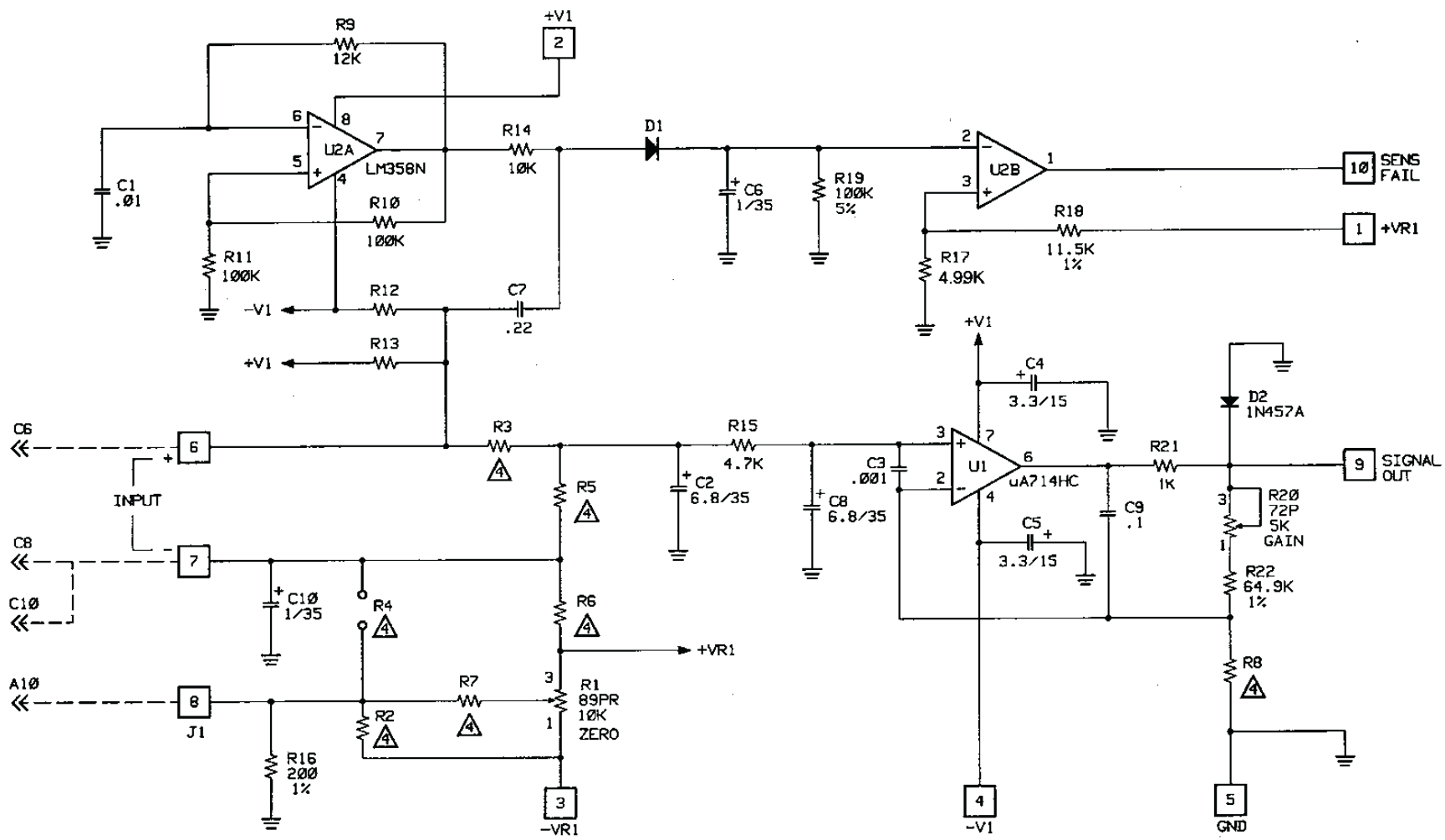

5 J1 PLUGS INTO P.C. BOARD X87-1000
4 COMPONENTS DETERMINED BY INPUT
3. CAPACITOR VALUES ARE IN FARADS
2. RESISTORS ARE 1/4W, 5%
1. RESISTOR VALUES ARE IN OHMS
NOTES: UNLESS OTHERWISE SPECIFIED

SCHEMATIC THERMOCOUPLE, mV, mA AMPLIFIER MODELS X87-S10, -S20	RONAN	
	DRAWING NO. X87-1002	REV. 2

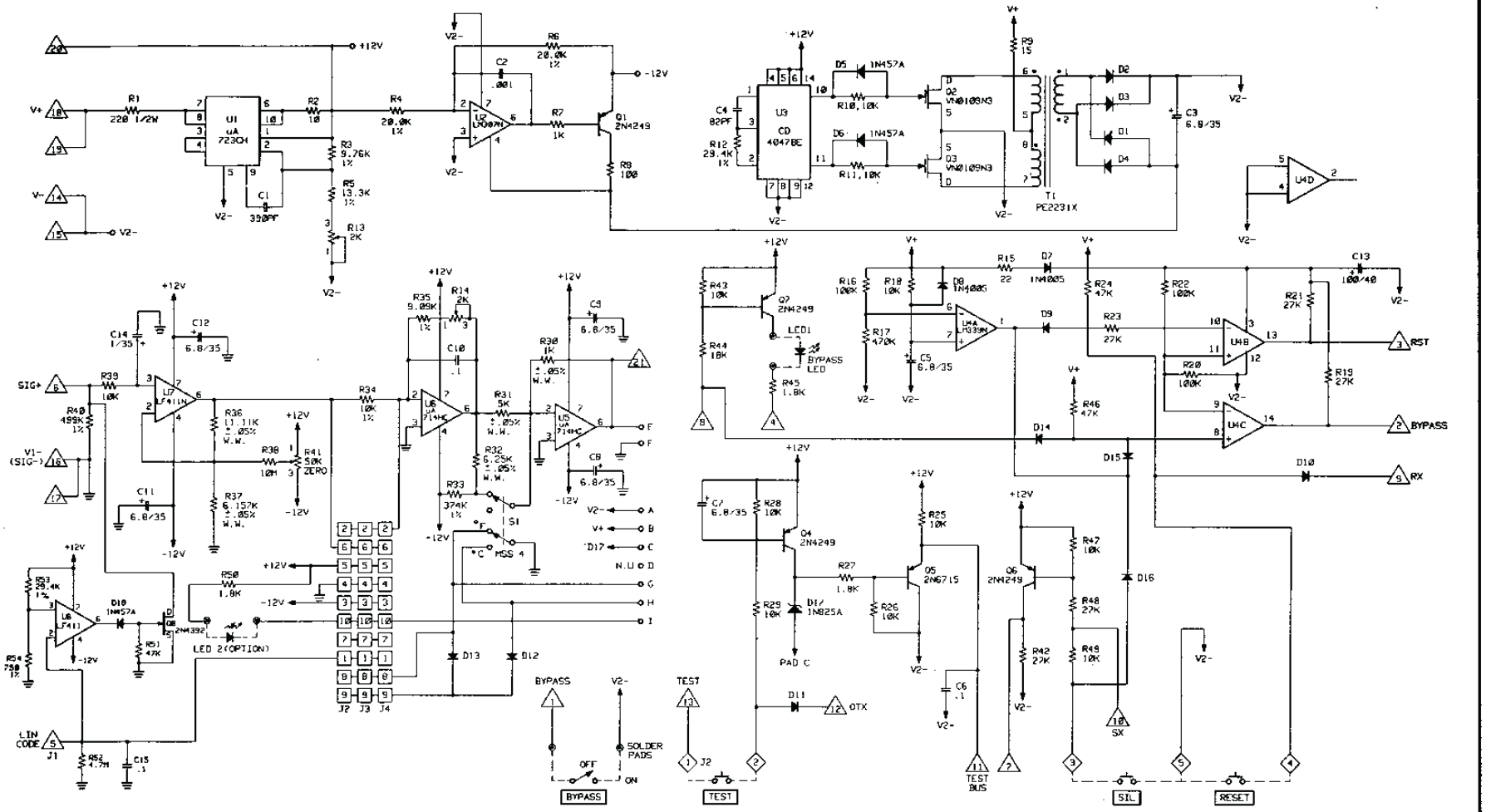

NOTES: UNLESS OTHERWISE SPECIFIED
1. RESISTORS ARE 1/4W, 5%
2. RESISTOR VALUES ARE IN OHMS
3. CAPACITOR VALUES ARE IN MICROFARADS
4. DIODES ARE 1N4148
5. J1 " △ " MATES WITH P2 ON X87-1005 P.C.BOARD
6. J2 " ◇ " MATES WITH MEMBRANE SWITCH PANEL

SCHEMATIC MASTER MODULE (HORIZONTAL BOARD) MODEL X87-100B	RONAN	
	DRAWING NO. X87-1003	REV. 4

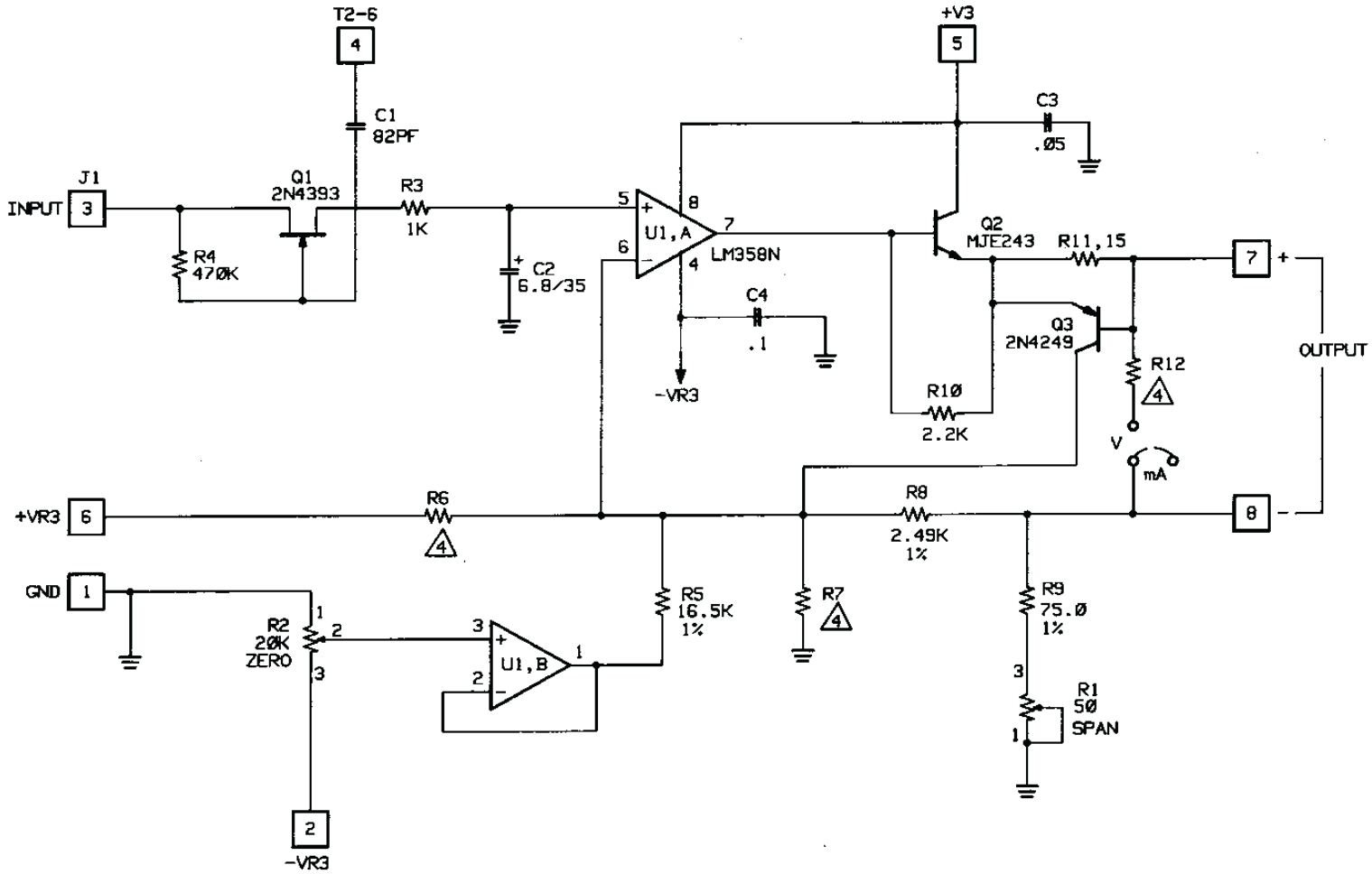

5. J1 CONNECTS TO P.C. BOARD X87-1000
4. VALUES DETERMINED BY OUTPUT REQUIREMENTS.
3. CAPACITOR VALUES ARE IN MICRO-FARADS.
2. RESISTORS ARE 1/4W 5%
1. RESISTOR VALUES ARE IN OHMS.

NOTES: UNLESS OTHERWISE SPECIFIED

SCHEMATIC TRANSMITTER MODEL X87-600	RONAN	
	DRAWING NO. X87-1004	REV. 1

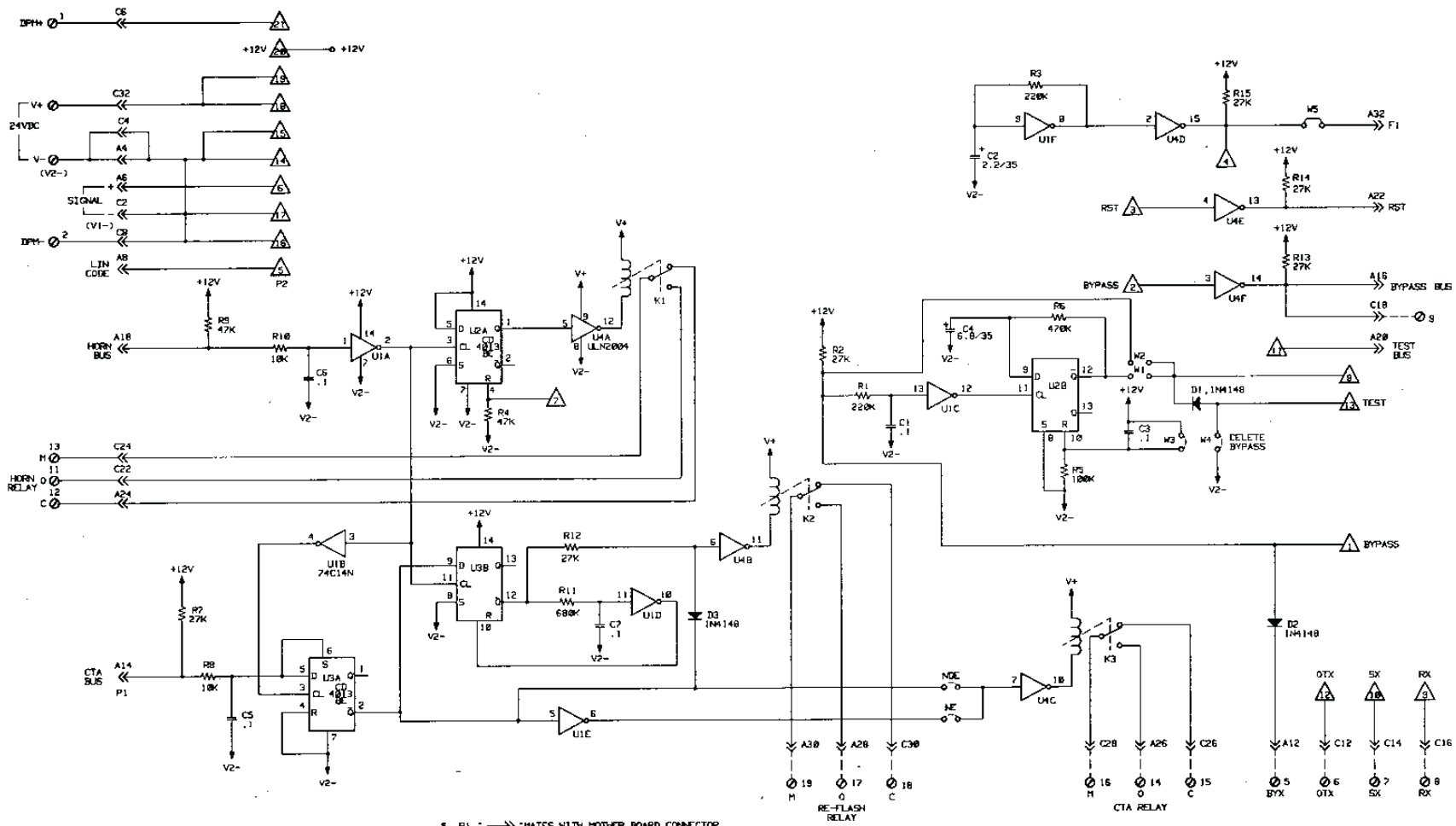

5. P1 " ——>> " MATES WITH MOTHER BOARD CONNECTOR.
4. P2 MATES WITH J1 ON X87-1003 P.C. BOARD
3. CAPACITOR VALUES ARE IN FARADS
2. RESISTORS ARE 1/4W, 5%
1. RESISTORS VALUES ARE IN OHMS

NOTES: UNLESS OTHERWISE SPECIFIED

SCHEMATIC MASTER MODULE (VERTICAL BOARD) MODEL X87-100B	RONAN	
	DRAWING NO. X87-1005	REV. 2

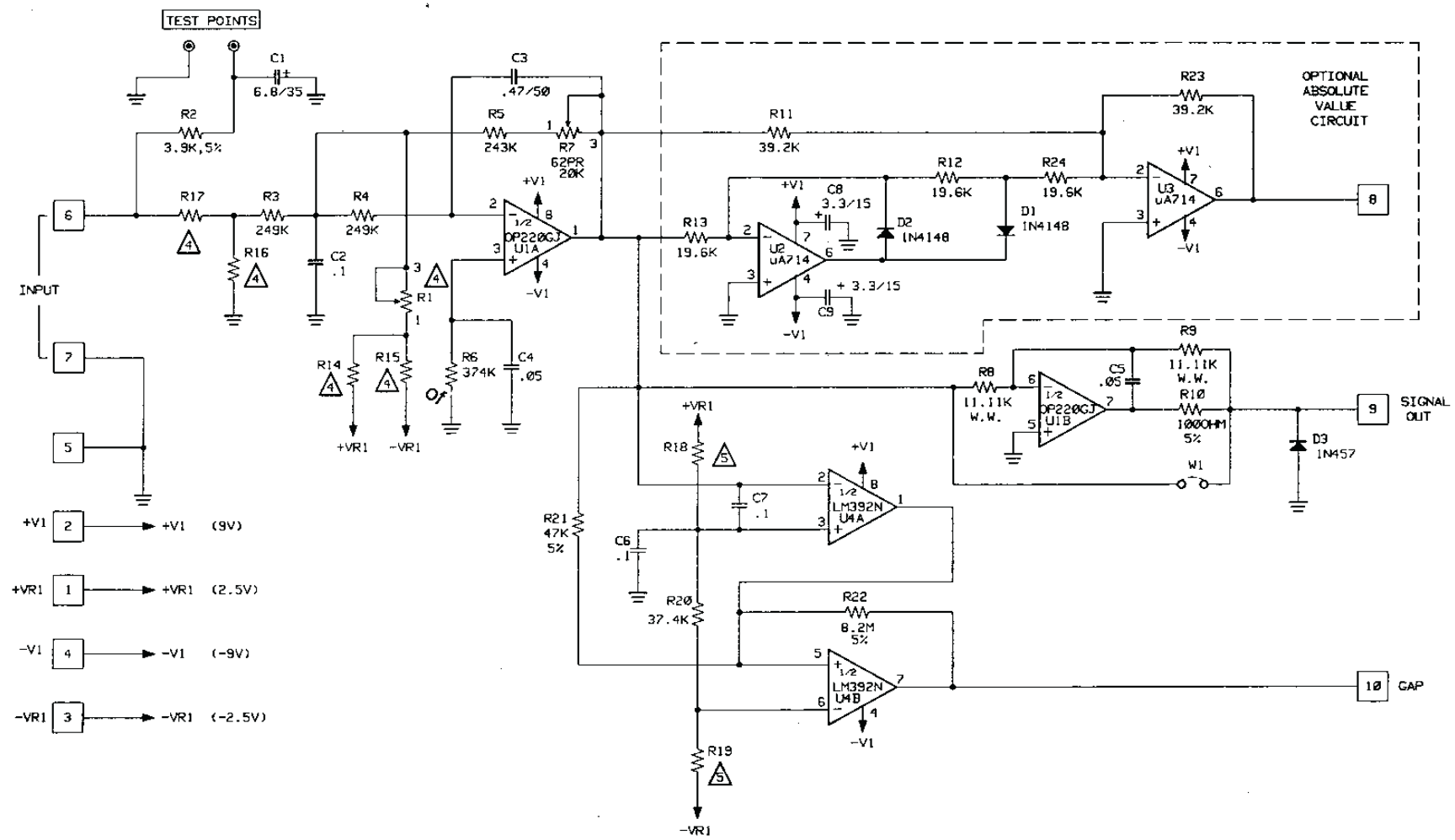

5 VALUES DETERMINED BY POSITION LIMITS.
4 VALUES DETERMINED BY INPUT RANGE.
3. CAPACITOR VALUES ARE IN MICROFARADS.
2. RESISTORS ARE M.F., 1%.
1. RESISTORS VALUES ARE IN OHMS.
NOTES: UNLESS OTHERWISE SPECIFIED

SCHEMATIC POSITION INPUT AMPLIFIER MODEL X87-S78	RONAN	
	DRAWING NO.	REV.
	X87-1012	0

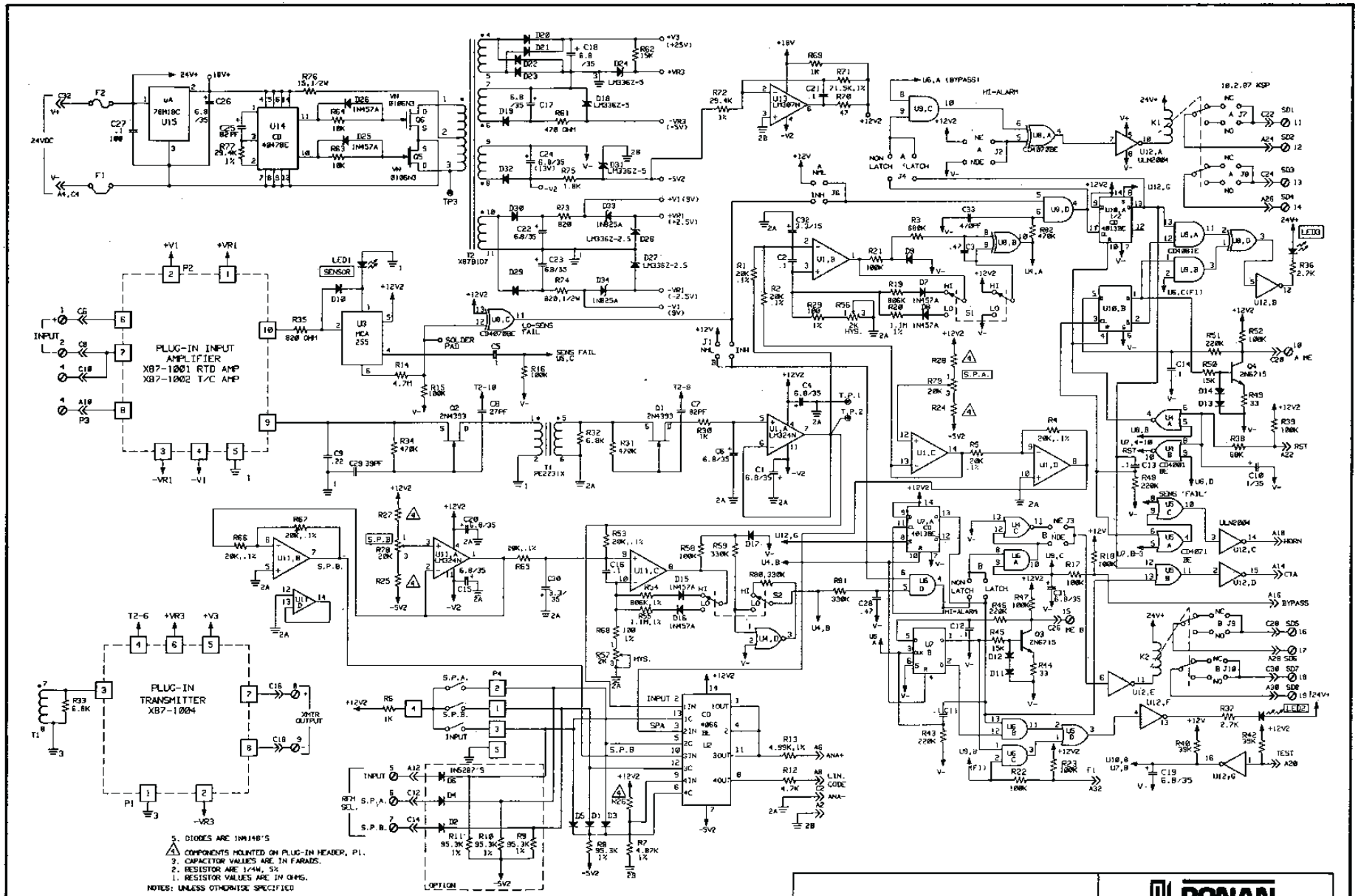

SCHEMATIC VIBRATION MONITOR SINGLE AND DUAL SETPOINT	RONAN	
	DRAWING NO.	REV.
	X87-1016	0

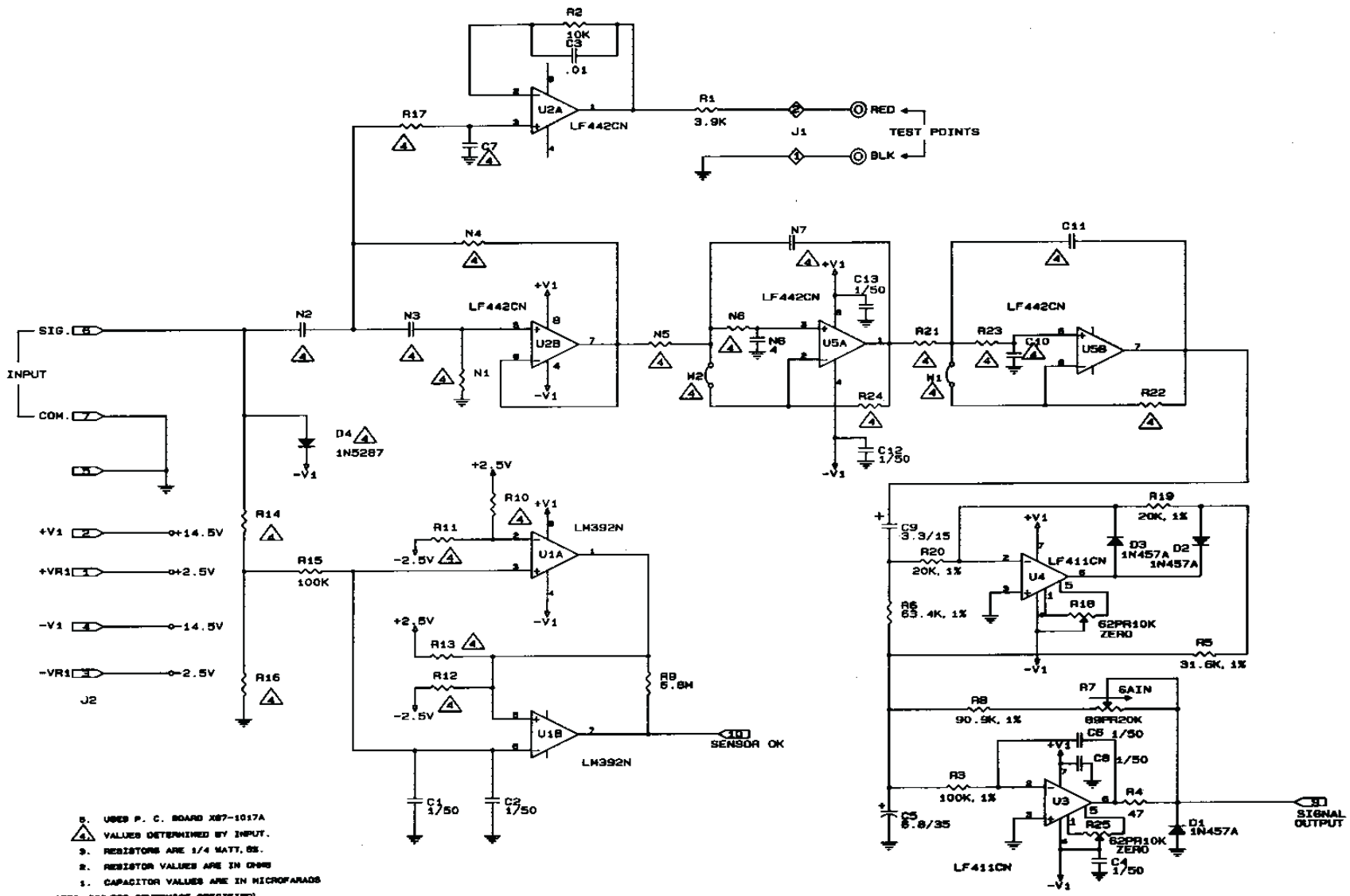

VIBRATION INPUT BOARD	RONAN	
	DRAWING NO.	REV.
	X87-1017	1

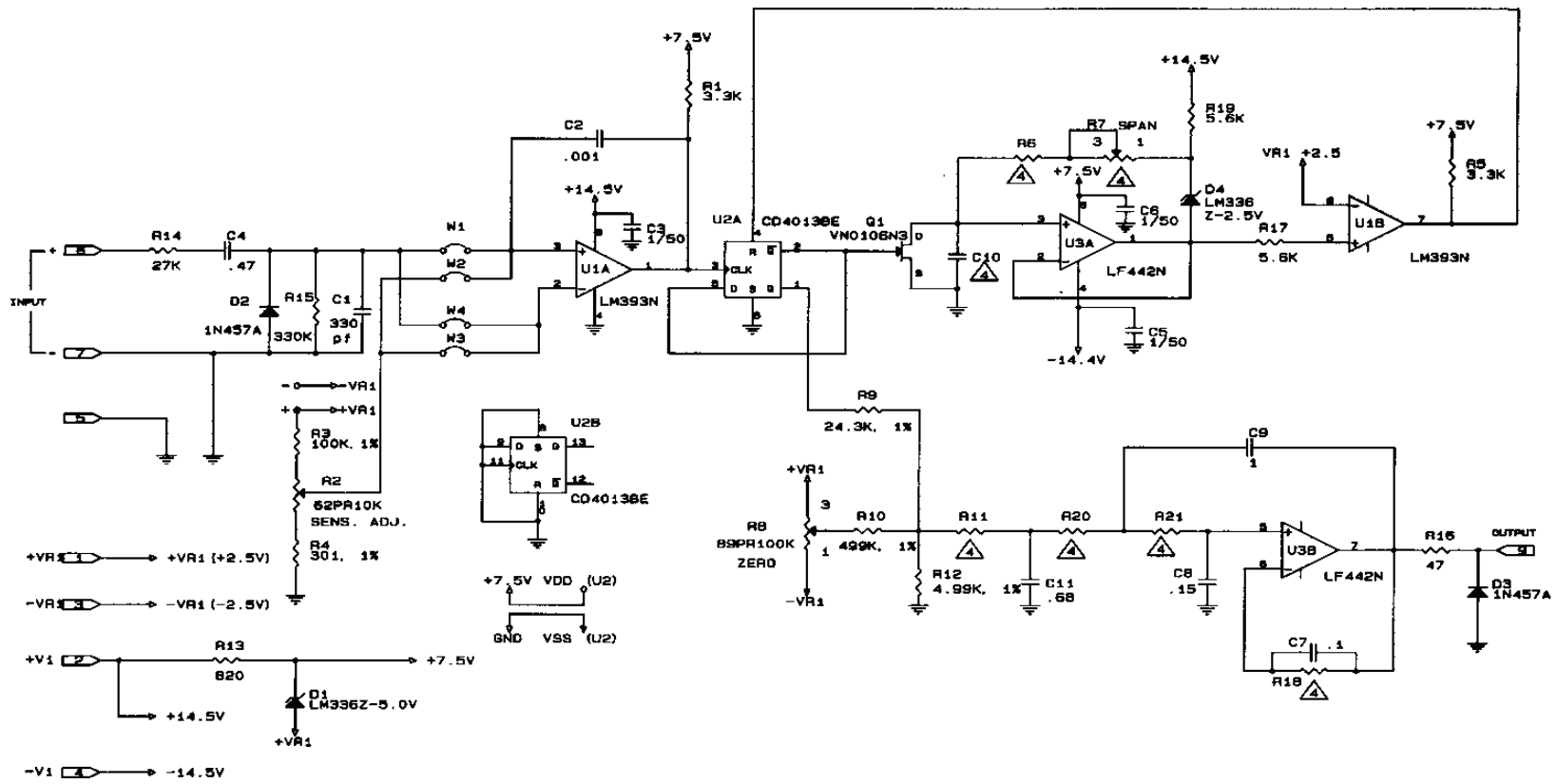

6. USES X87-1018A P. C. BOARD
4. VALUES DETERMINED BY INPUT
3. RESISTORS ARE 1/4 WATT, 5%.
2. RESISTOR VALUES ARE IN OHMS
1. CAPACITOR VALUES ARE IN MICROFARADS

NOTES: (UNLESS OTHERWISE SPECIFIED)

FREQUENCY INPUT BOARD	RONAN	
	DRAWING NO. X87-1018	REV. 0

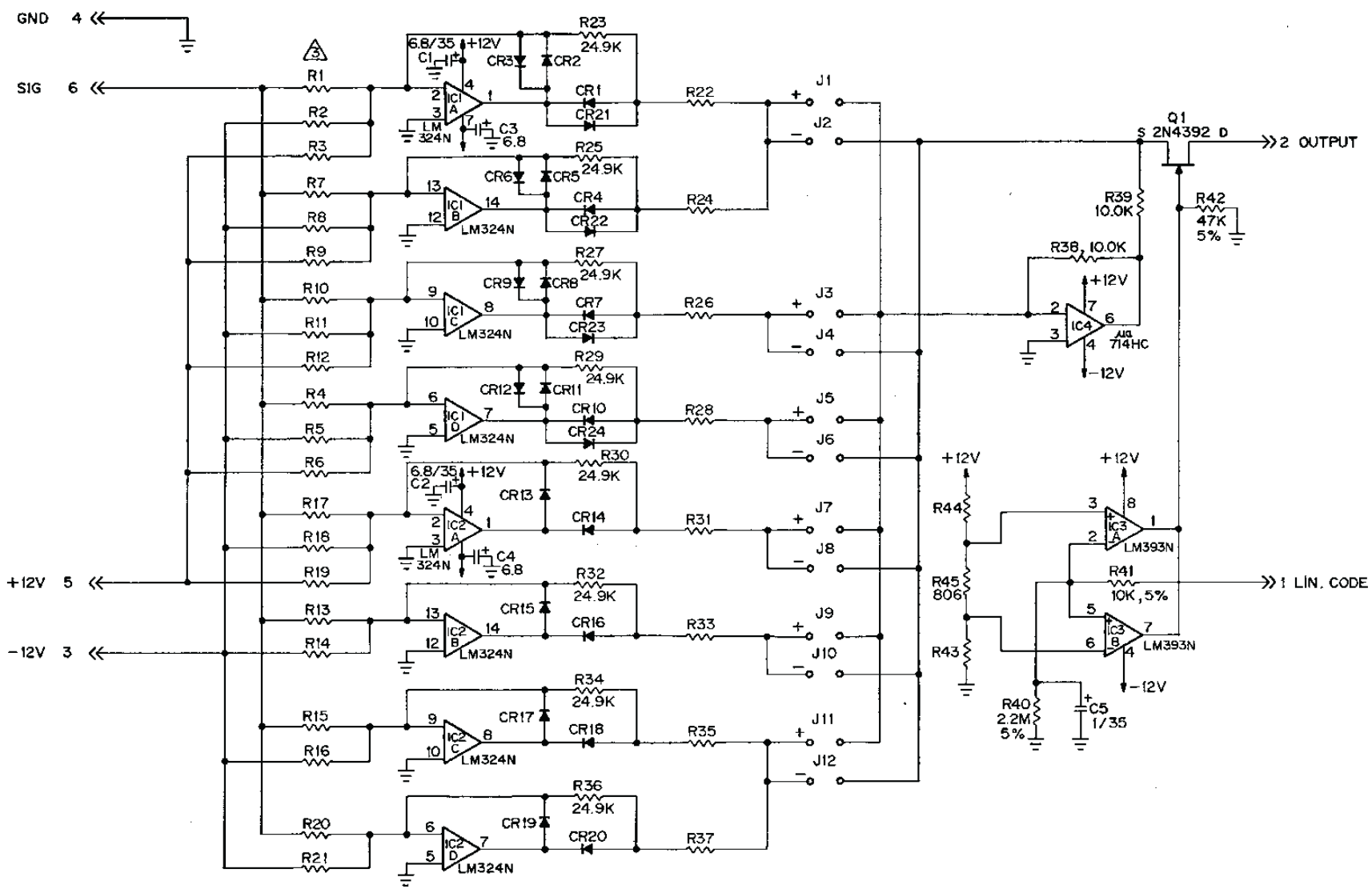

NOTES: UNLESS OTHERWISE SPECIFIED.
1. RESISTORS ARE 1% METAL FILM.
2. CAPACITORS ARE IN MICROFARADS.
3. UNSPECIFIED RESISTOR VALUES ARE DETERMINED BY LINERIZING FUNCTION REQUIRED.
4. DIODES ARE IN457A.

SCHEMATIC LINEARIZER MODEL X87/X83-200	RONAN	
	DRAWING NO. X83-1004	REV. 1

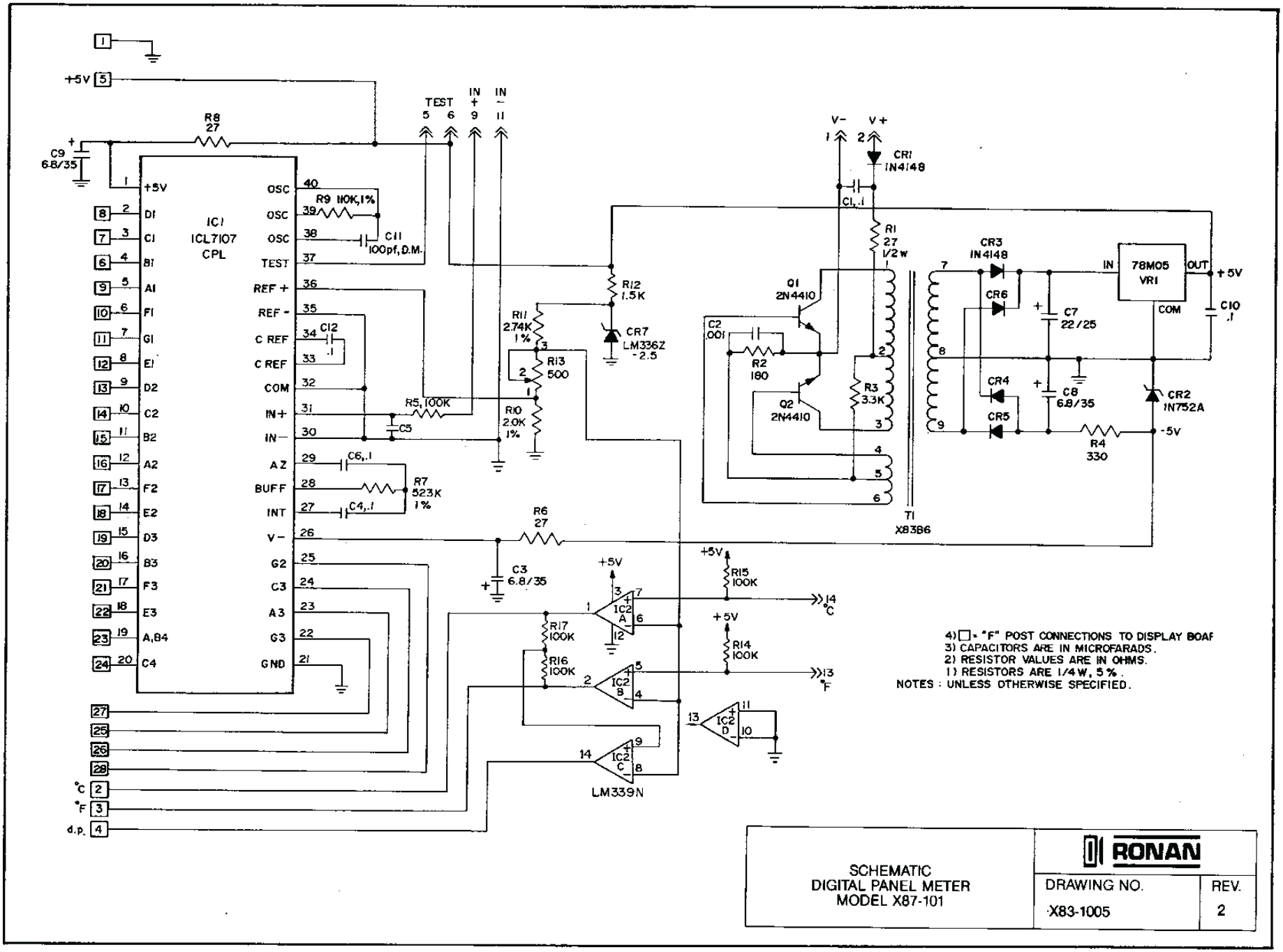

NOTES : UNLESS OTHERWISE SPECIFIED.
1) RESISTORS ARE 1/4 W, 5 %.
2) RESISTOR VALUES ARE IN OHMS.
3) CAPACITORS ARE IN MICROFARADS.
4) □ = "F" POST CONNECTIONS TO DISPLAY BOAF

SCHEMATIC DIGITAL PANEL METER MODEL X87-101	RONAN	
	DRAWING NO. X83-1005	REV. 2

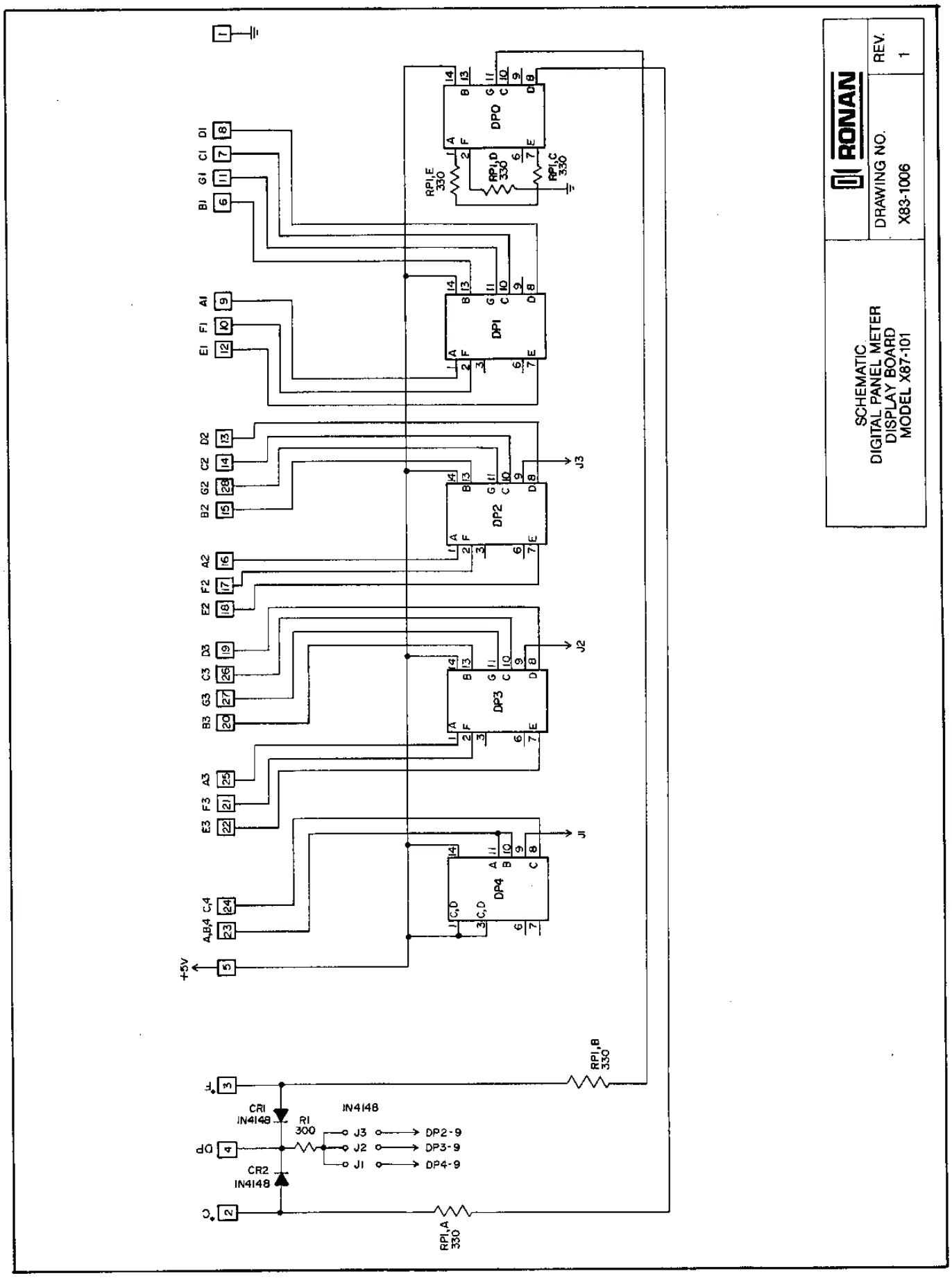
RONAN
REV.
1
DRAWING NO.
X83-1006
SCHEMATIC
DIGITAL PANEL METER
DISPLAY BOARD
MODEL X87-101
DP0
DP1
DP2
DP3
DP4
RP1,E 330
RP1,D 330
RP1,C 330
RP1,B 330
RP1,A 330
CR1 IN4148
CR2 IN4148
R1 300
IN4148
J3 → DP2-9
J2 → DP3-9
J1 → DP4-9
+5V

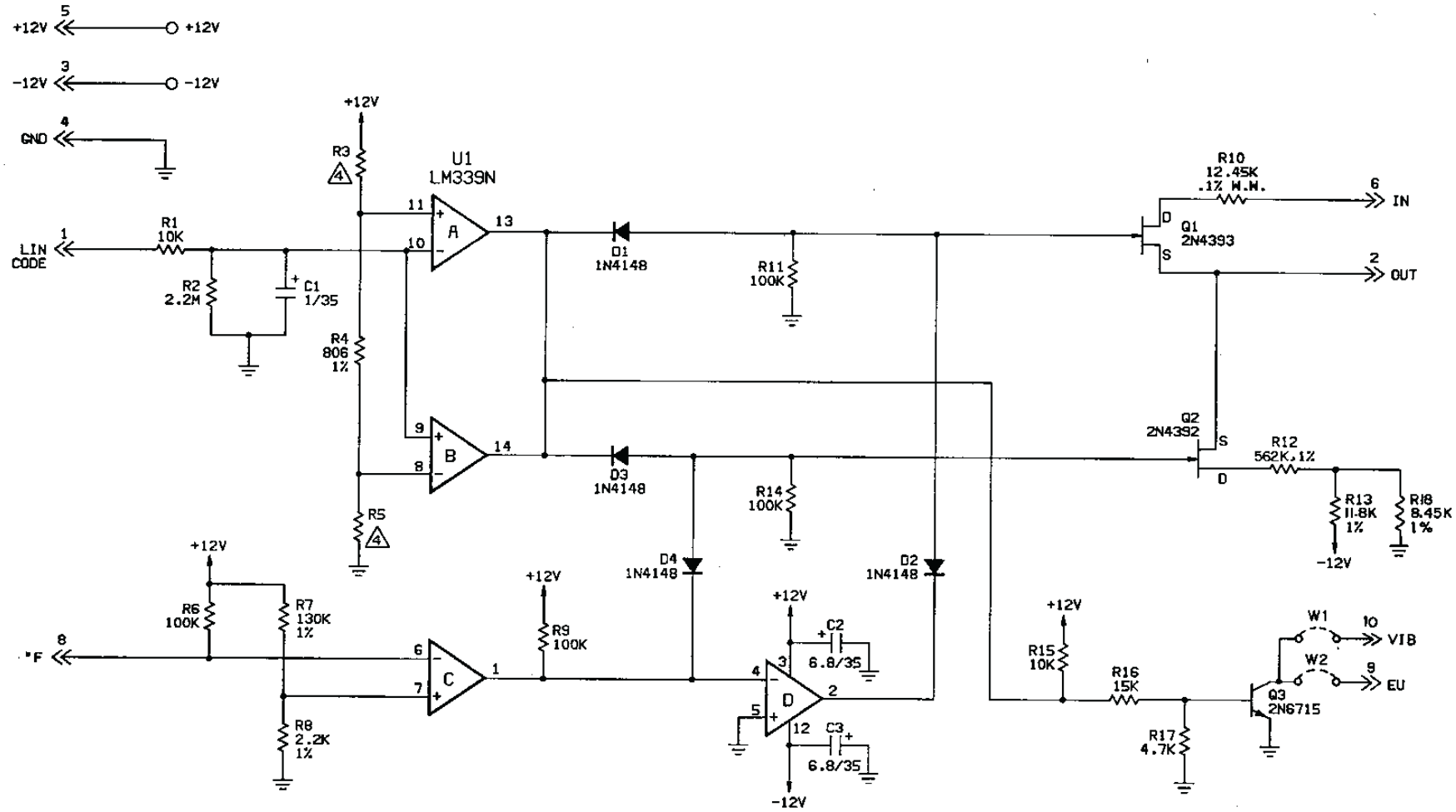

4 VALUES DETERMINED BY BOARD FUNCTION
3. CAPACITOR VALUES ARE IN MICROFARADS
2. RESISTOR VALUES ARE IN OHMS
1. ALL RESISTORS ARE 1/4W, 5%
NOTES: UNLESS OTHERWISE SPECIFIED

SCHEMATIC ENGINEERING UNITS LINEARIZER MODEL X83-200-EU	RONAN	
	DRAWING NO.	REV.
	X83-1031	2

Instructions and Operating Manual

SERIES X87

HIGH-DENSITY PROCESS MONITORING SYSTEM

Errata Sheet

Revision March 1, 1990

The following drawings have been updated since publication of the manual, May 1989, and are enclosed herein:

	Manual Page No.
X87D1, REV. 3	60
X87D46, REV. 6	63
X87D47, REV. 3	64

RONAN

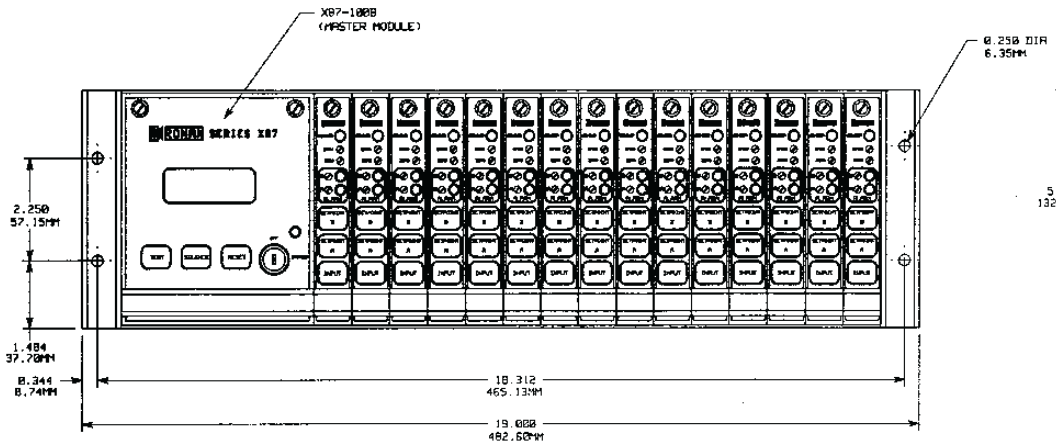

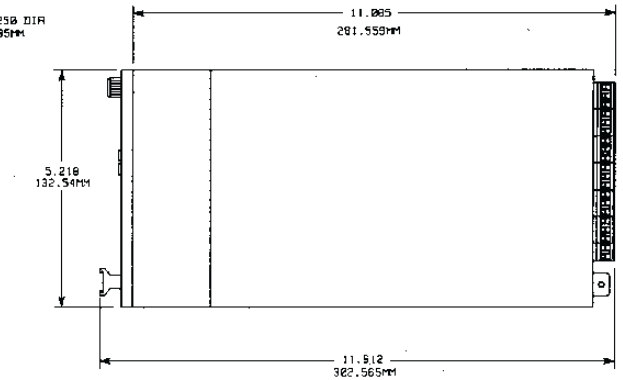

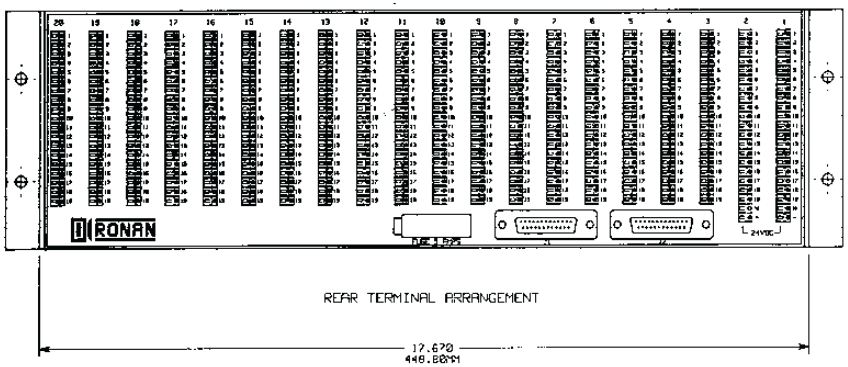

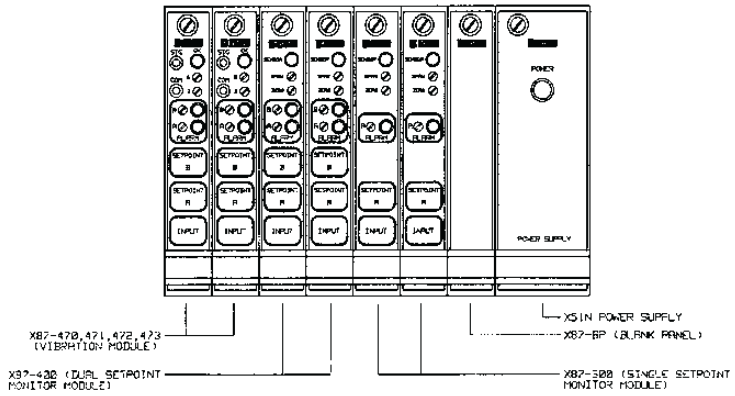

OUTLINE DRAWING X87PR-20	RONAN	
	DRAWING NO. X87D1	REV. 3

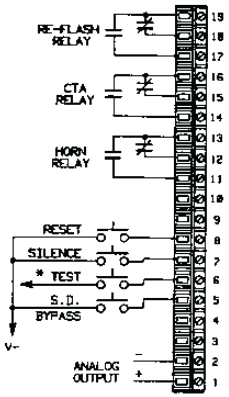

MASTER MODULE (NOTE 3)
* TO ENABLE TEST FUNCTION ONLY WHEN BYPASS IS ACTIVE CONNECT TEST SW TO TERMINAL 9.

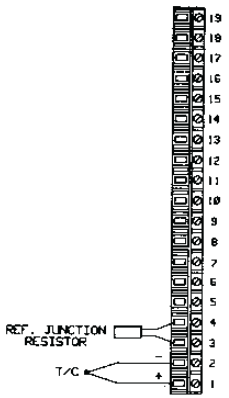

THERMOCOUPLE INPUT

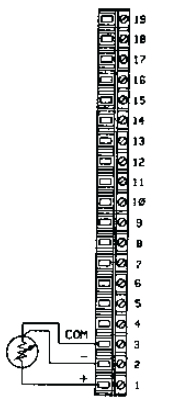

RTD INPUT
(FOR 2-WIRE RTD JUMPER BETWEEN TERMINALS 2 & 3)

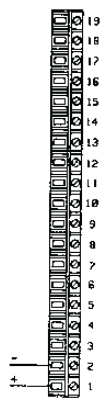

mV. V INPUT

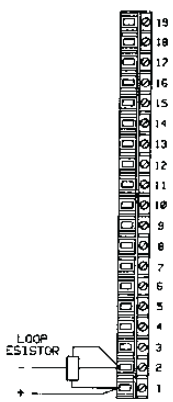

mA INPUT
(TERMINALS 2 AND 3 CONNECTED TOGETHER INTERNALLY)

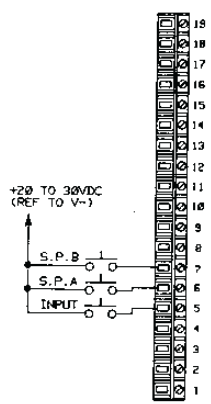

REMOTE SELECT
OF DISPLAY

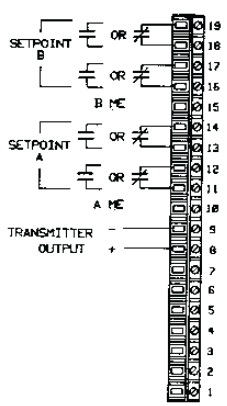

OUTPUT
(COMMON TO ALL INPUT MODULES)
SETPOINT B IS OPTIONAL

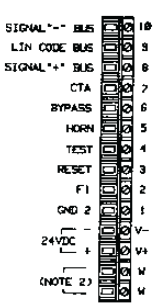

SURFACE MOUNT AUXILIARY TERMINAL STRIP
(1 THROUGH 10 ARE SYSTEM BUSSES)

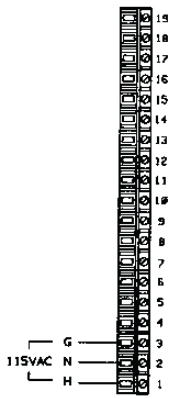

POWER INPUT CONNECTIONS
FOR X87-115-50 POWER SUPPLY

NOTES : UNLESS OTHERWISE SPECIFIED

1. 24VDC POWER IS CONNECTED TO POSITIONS 1 & 2 LABELED 24V"+" AND "-". APPLIES ONLY TO " RACK AND PANEL MOUNT.
2. CONNECT AN 18 GA JUMPER BETWEEN TERMINALS LABELED "W" AT AUXILIARY TERMINAL STRIP. IF TWO OR MORE CHASSIS ARE INTERCONNECTED VIA AUXILIARY TERMINAL STRIPS, INSTALL "W" TO "W" JUMPER ONLY ON CHASSIS WITH MASTER MODULE
3. THE MASTER MODULE OCCUPIES FIVE POSITIONS. CONNECTIONS ARE MADE TO THE LEFT TERM. STRIP IN A SET OF TERM. STRIPS. I.E. POSITION 1 IS USED IF THE MASTER MODULE IS IN POS. 1-5.
4. IF SHIELD GROUNDED AT TRANSDUCER, DO NOT MAKE CONNECTION AT MONITOR END

X87 SM TERMINAL ARRANGEMENTS	RONAN	
	DRAWING NO. X87D82	REV. 8

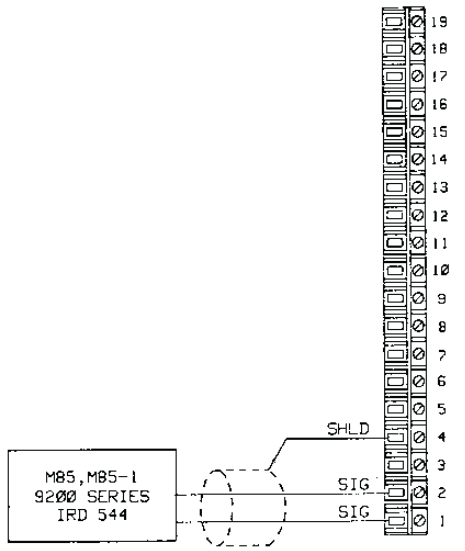

VELOCITY INPUTS

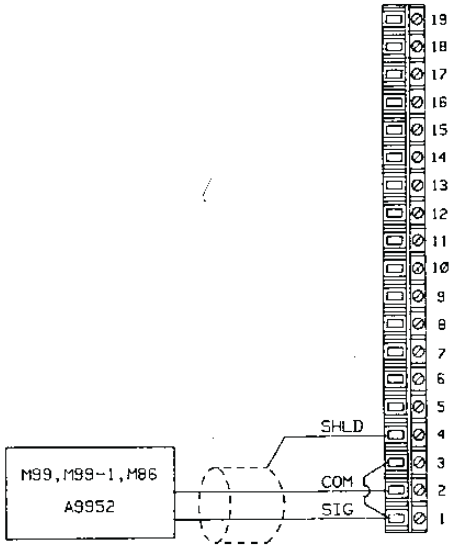

ACCELERATION TO VELOCITY CONVERTER

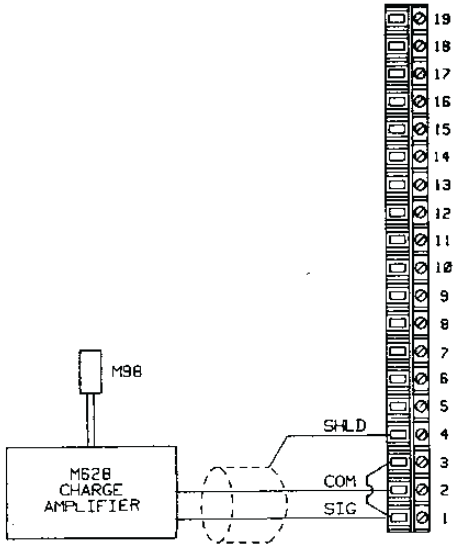

ACCELERATION (HIGH TEMP.)

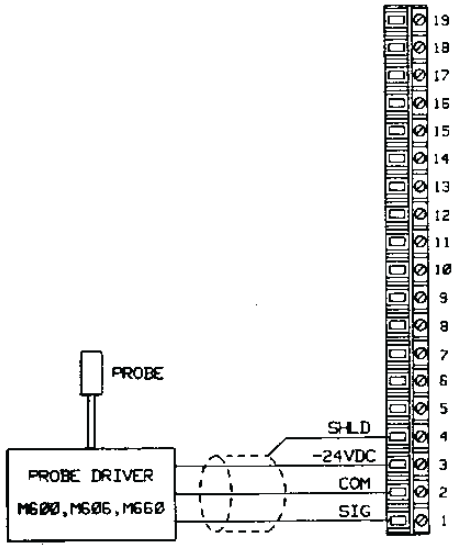

DISPLACEMENT INPUTS

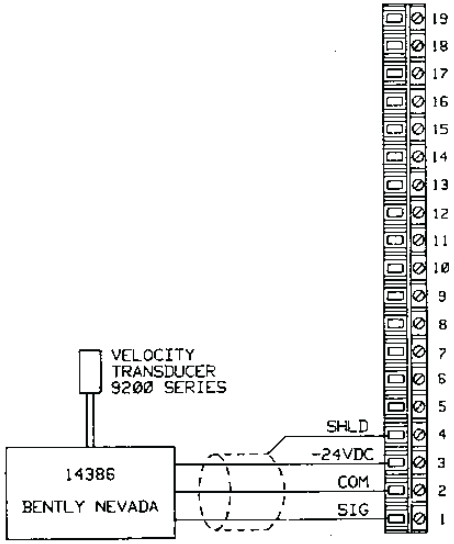

VELOCITY TO DISPLACEMENT CONVERTER

X87 SM TERMINAL ARRANGEMENTS VIBRATION INPUTS	RONAN	
	DRAWING NO. X87D82	REV. 8

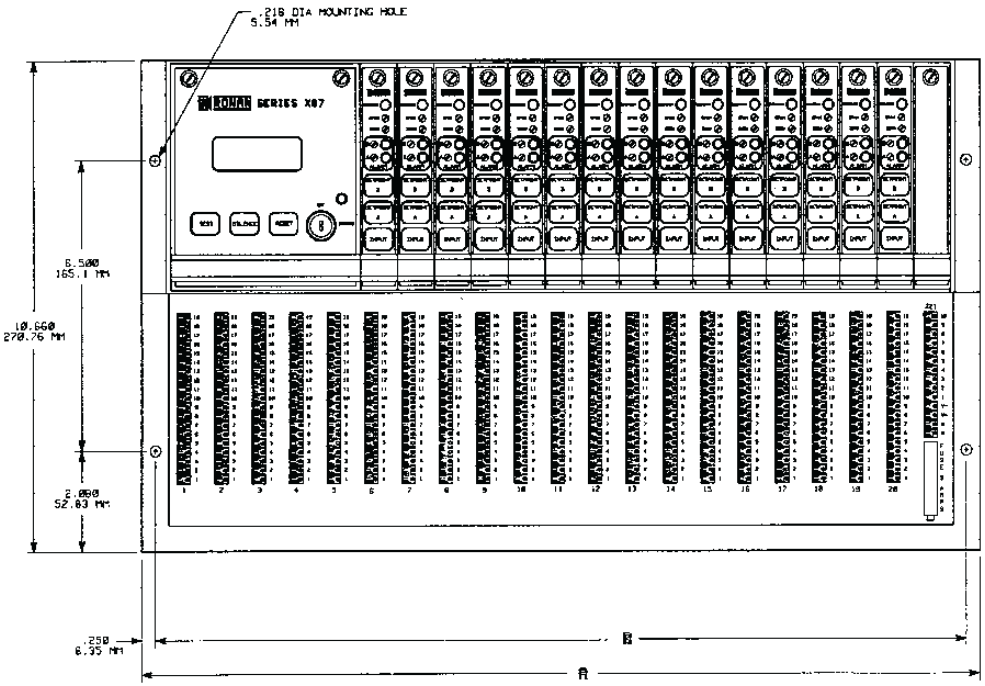

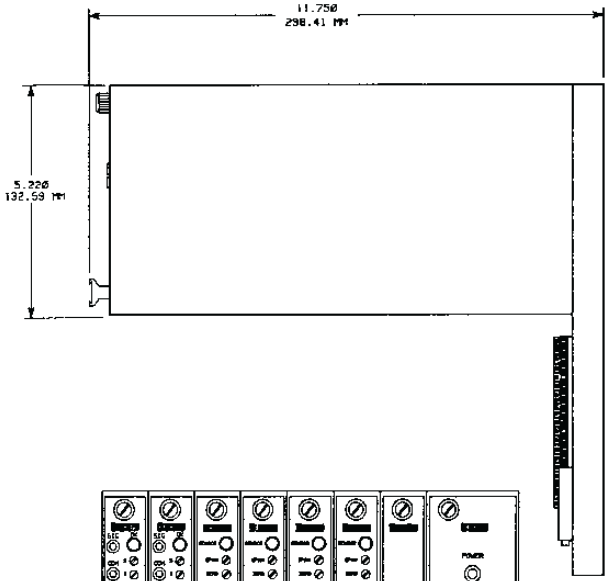

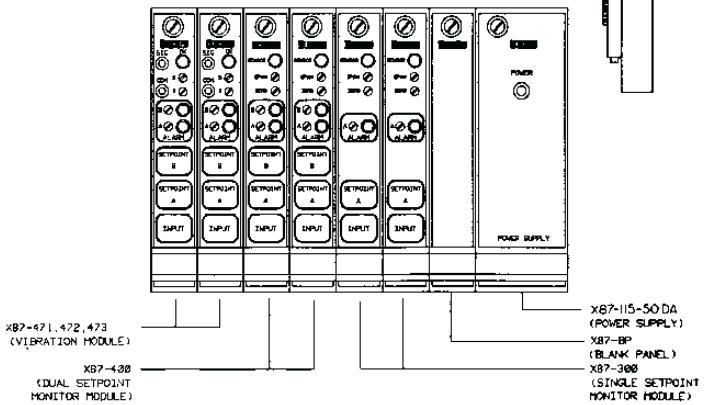

MODEL NO.	DIM A		DIM B	
	IN	MM	IN	MM
X87SM-20	19.375	492.12	18.875	479.42
X87SM-13	13.340	338.84	12.840	326.14

OUTLINE DRAWING X87SM-20 AND X87SM-13	RONAN	
	DRAWING NO. X87D47	REV. 3

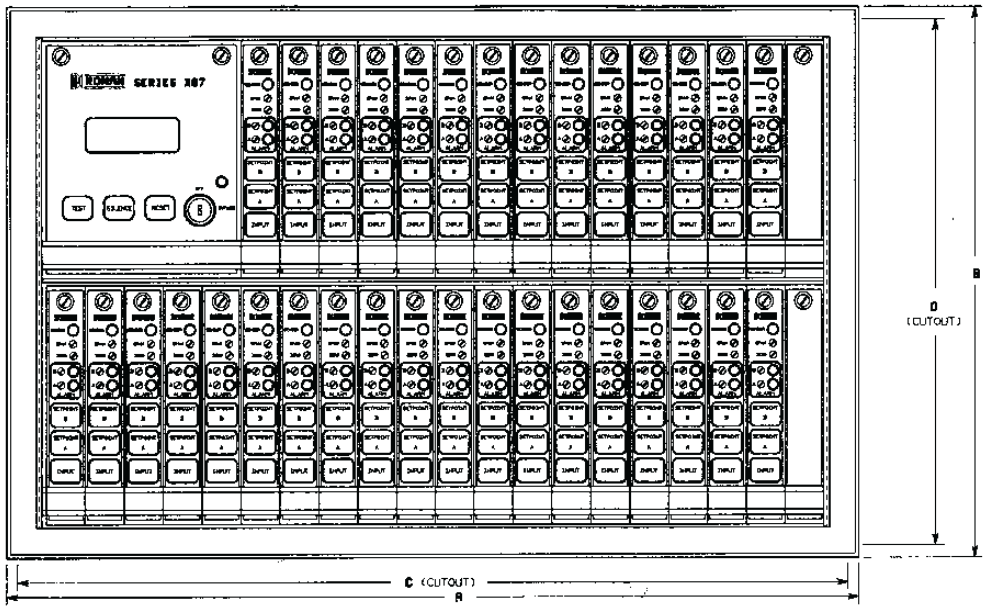

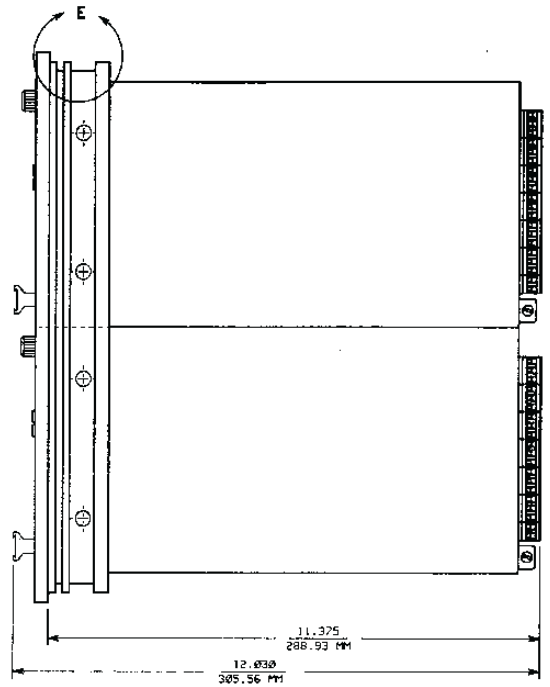

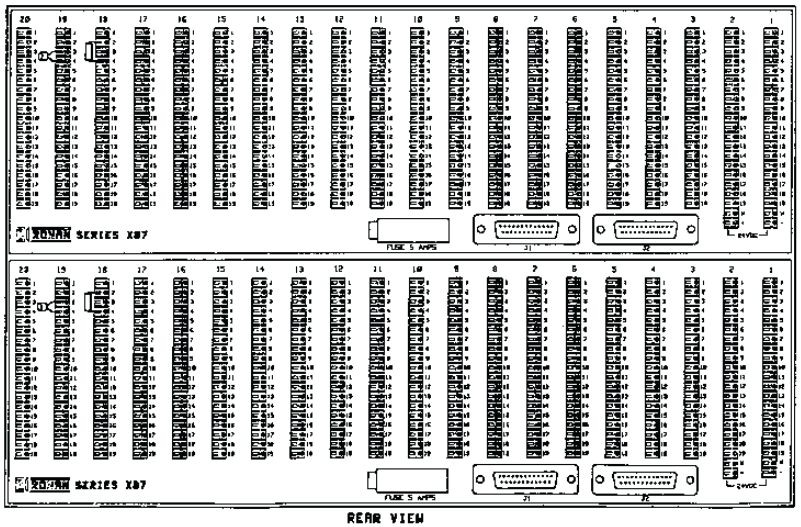

REAR VIEW

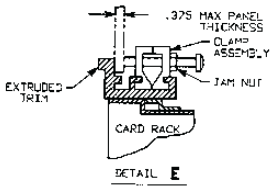

DETAIL E

MODEL	DIM A		DIM B		DIM C		DIM D	
	IN	MM	IN	MM	IN	MM	IN	MM
X87PM-40	19.000	482.60	11.940	303.30	18.375	466.70	11.310	287.30
X87PM-20	19.000	482.60	6.720	170.70	18.375	466.70	6.050	154.70
X87PM-26	12.950	328.93	11.940	303.30	12.320	312.93	11.310	287.30
X87PM-13	12.950	328.93	6.720	170.70	12.320	312.93	6.090	154.70

OUTLINE DRAWING
X87PM

RONAN

DRAWING NO. X87D46

REV. 6

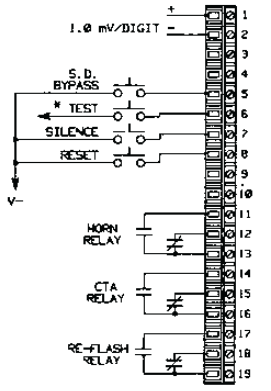

MASTER MODULE
(NOTE 3)
* TO ENABLE TEST FUNCTION ONLY WHEN BYPASS IS ACTIVE CONNECT TEST SW TO TERMINAL 9. OTHERWISE CONNECT TO V-.

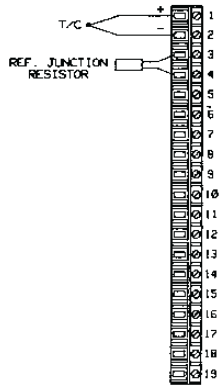

THERMOCOUPLE INPUT

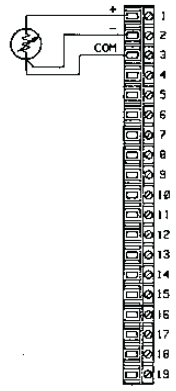

RTD INPUT
(FOR 2-WIRE RTD JUMPER BETWEEN TERMINALS 2 & 3)

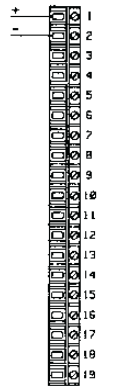

mV. V INPUT

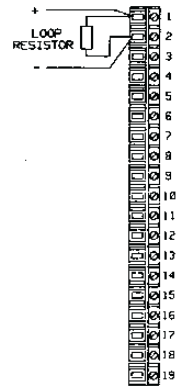

mA INPUT
(TERMINALS 2 AND 3 CONNECTED TOGETHER INTERNALLY)

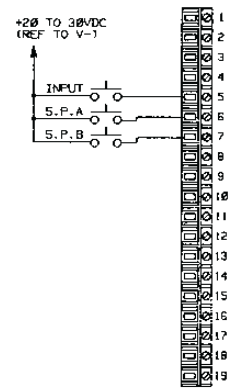

REMOTE SELECT
OF DISPLAY

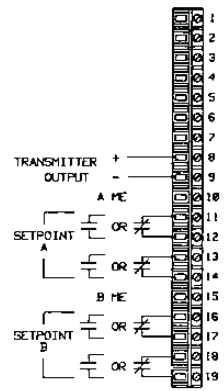

OUTPUT
(TYPICAL TO ALL INPUT MODULES)
SETPOINT B IS OPTIONAL

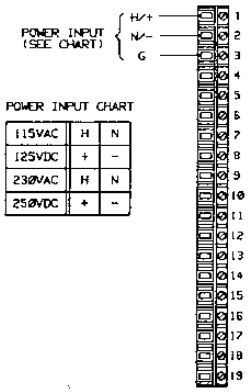

POWER INPUT CHART

115VAC	H	N
125VDC	+	-
230VAC	H	N
250VDC	+	-

POWER INPUT CONNECTIONS FOR X87-115-50 POWER SUPPLY

NOTE:
1. 24VDC POWER IS CONNECTED TO POSITIONS 21 OF TERMINAL STRIP POSITIONS 1 & 2 LABELED 24V "+" AND "-"
2. CONNECT 18GA WIRE BETWEEN POSITIONS 20 OF TERMINAL STRIP POSITIONS 1 & 2 OF CHASSIS WITH MASTER MODULE ONLY. TERMINALS ARE LABELED "W". (CONNECT "W" FROM POSITION 1 TO "W" OF POSITION 2.)
3. THE MASTER MODULE OCCUPIES FIVE POSITIONS. CONNECTIONS ARE MADE TO THE LEFT TERM. STRIP OF THE FIVE POSITIONS, I. E., POSITION 1 IS USED IF THE MASTER MODULE IS IN POSITIONS 1-5.
4. IF SHIELD GROUNDED AT TRANSDUCER, DO NOT MAKE CONNECTION AT MONITOR END.

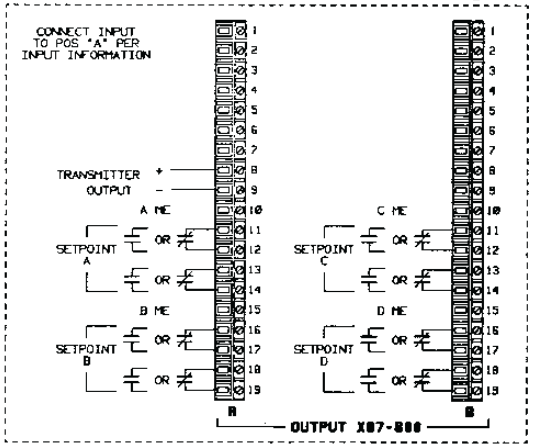

X87 RM, PM TERMINAL ARRANGEMENTS	RONAN	
	DRAWING NO. X87D36	REV. 10

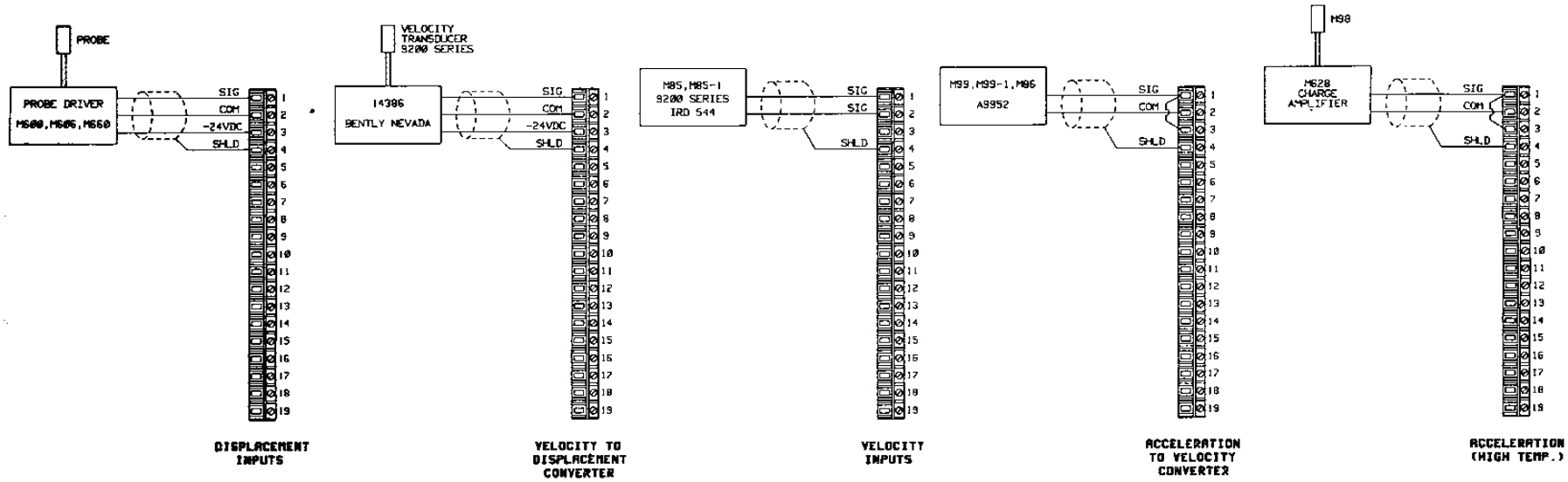

X87 RM, PM TERMINAL ARRANGEMENTS VIBRATION INPUTS	RONAN	
	DRAWING NO.	REV.
	X87D36	10

RONAN ENGINEERING COMPANY
P.O. Box 1275
21200 Oxnard Street
Woodland Hills,
California 91367 U.S.A.
(818) 883-5211 • Telex 698-490
FAX (818) 992-6435

RONAN ENGINEERING LTD. U.K.
1 Tilley Road
Crowther District 3
Washington, Tyne and Wear
United Kingdom, NE38-OEA
(091) 416-1689 • Telex 537-746
FAX (091) 416-5856

RONAN ENGINEERING LIMITED
32 Bermondsey Road
Toronto, Ontario
Canada M4B1Z5
(416) 752-0310 • Telex 63662
FAX (416) 752-8072

RONAN ENGINEERING (AUST.) PTY. LTD.
Unit 10, 8 Leighton Place
Hornsby, N.S.W. 2077
Australia
(02) 477-7344 • Telex 73467
FAX (02) 477-6151

X871O / 589

Printed in U.S.A.