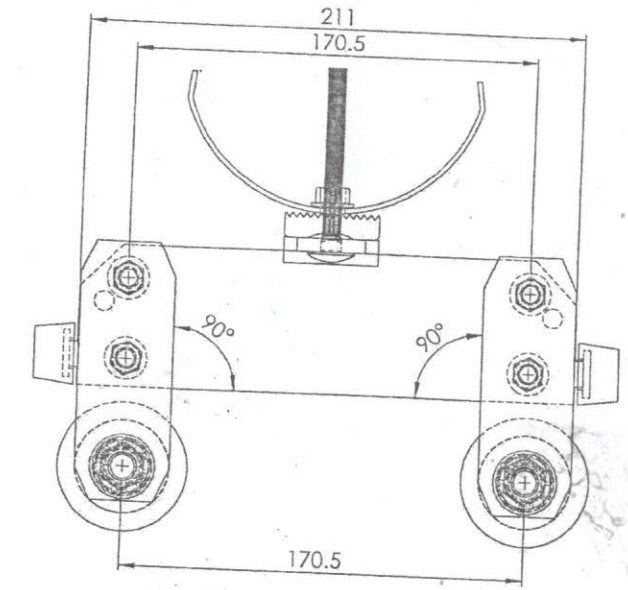

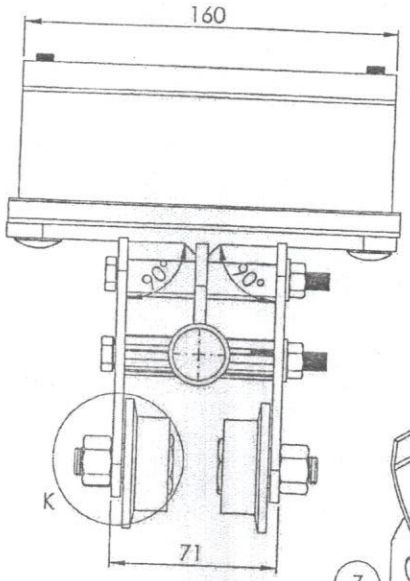

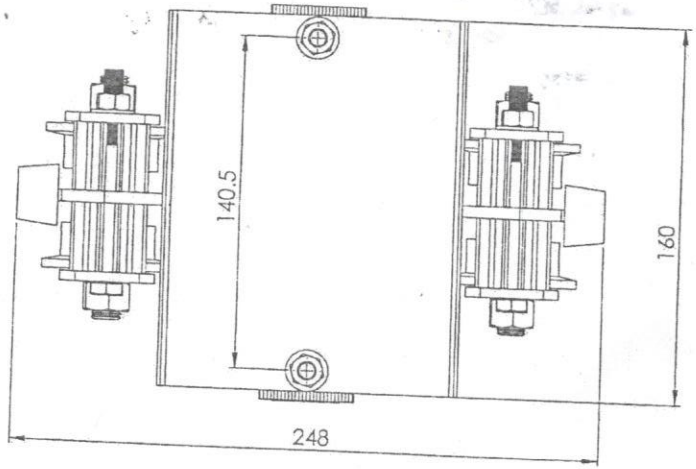

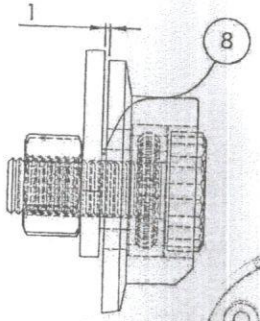

DETAIL K
SCALE 1 : 1

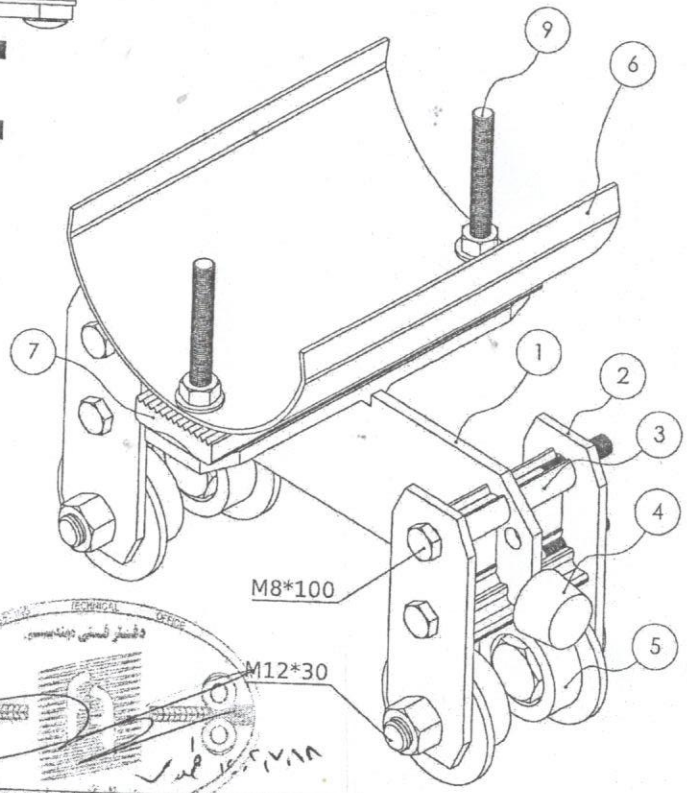

Dimension Without Tolerance Specification According To Din 7168

GOST / DIN	2	3	4	5	6	7	9
Ra	100	40	20	10	5	2.5	1.25	0.32
Rz	630	160	80	40	20	10	6.3	1.6

AZARBAYJAN STEEL CO

REV	DESCRIPTION	DATE	NAME
01	Changed Drawing No.	1402/07/18	Mostafavi
02	...	...	...
03	...	...	...
04	...	...	...

	DATE	NAME
DRAWN	1402-07-15	Mostafavi
CHECKED1	1402-07-15	Kazemi
CHECKED2	1402-07-15	Tolueli
APPROVED	1402-07-15	Nur Alizadeh
AS.BUILT	...	
POS	CRANE 15 TON	
AS.NUMBER	SM4B031M6301001	
PRODUCT	...	

SCALE: 1:1.7 | WEIGHT: KG

MATERIAL: ...

TITLE: Cable Trolley

DRAW NUMBER: N_450845.Y

HEAT TREATMENT : .. HRC

SHEET: 1.5 | PART : Assembly

SIZE: A3 | REV: 01

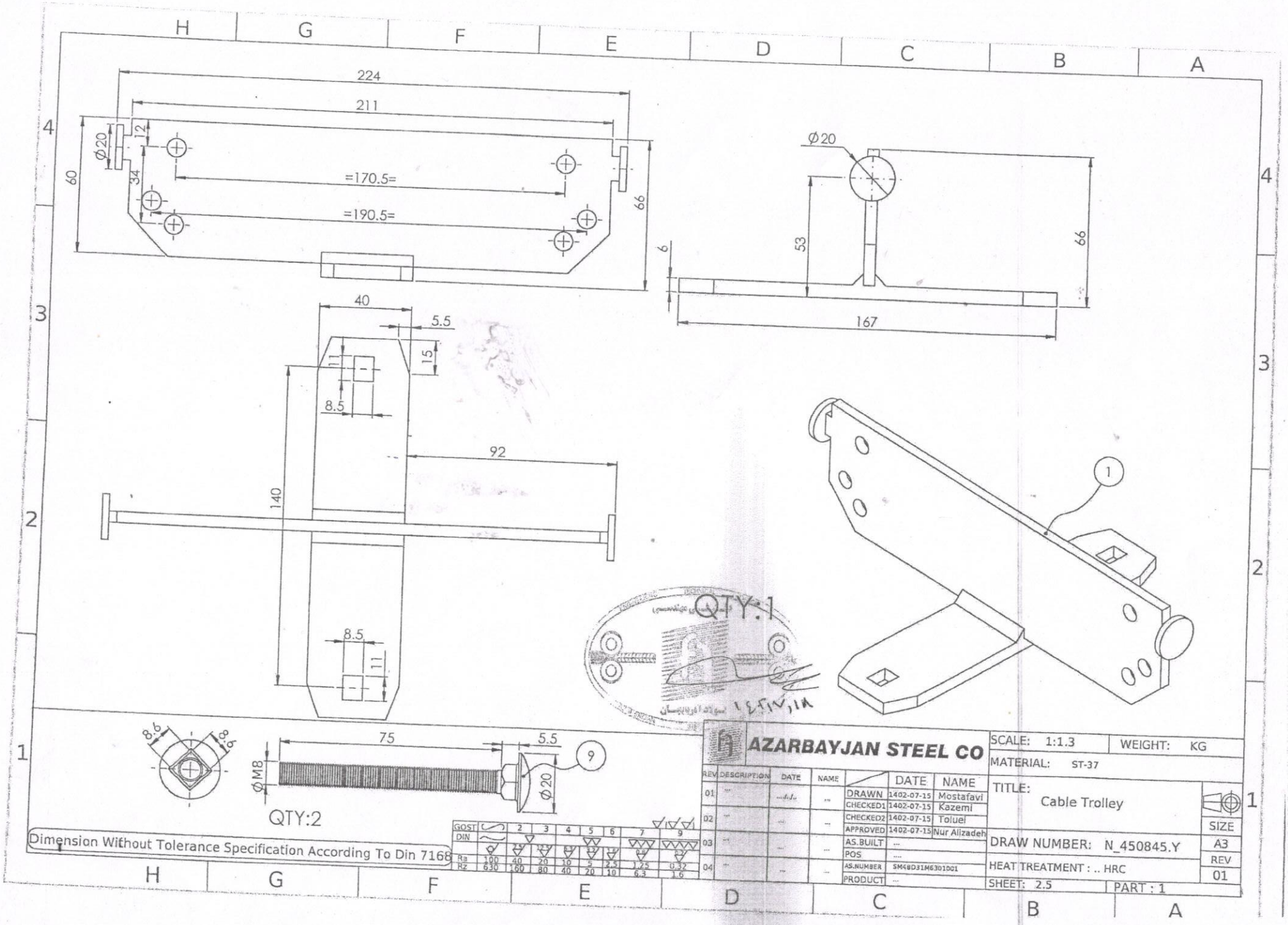
224
211
Ø20
12
60
34
=170.5=
=190.5=
66
Ø20
53
66
6
167
40
5.5
15
11
8.5
92
140
8.5
11
1
QTY:1
8.6
8.6
ØM8
75
5.5
9
Ø20
QTY:2
Dimension Without Tolerance Specification According To Din 7168
GOST
DIN
Ra 100 40 20 10 5 2.5 1.25 0.32
Rz 630 160 80 40 20 10 6.3 1.6
AZARBAYJAN STEEL CO
REV DESCRIPTION DATE NAME
01
02
03
04
DRAWN 1402-07-15 Mostafavi
CHECKED1 1402-07-15 Kazemi
CHECKED2 1402-07-15 Toluel
APPROVED 1402-07-15 Nur Alizadeh
AS.BUILT
POS
AS.NUMBER SM48D31M6301D01
PRODUCT
SCALE: 1:1.3
WEIGHT: KG
MATERIAL: ST-37
TITLE: Cable Trolley
SIZE A3
DRAW NUMBER: N_450845.Y
REV 01
HEAT TREATMENT : .. HRC
SHEET: 2.5
PART : 1

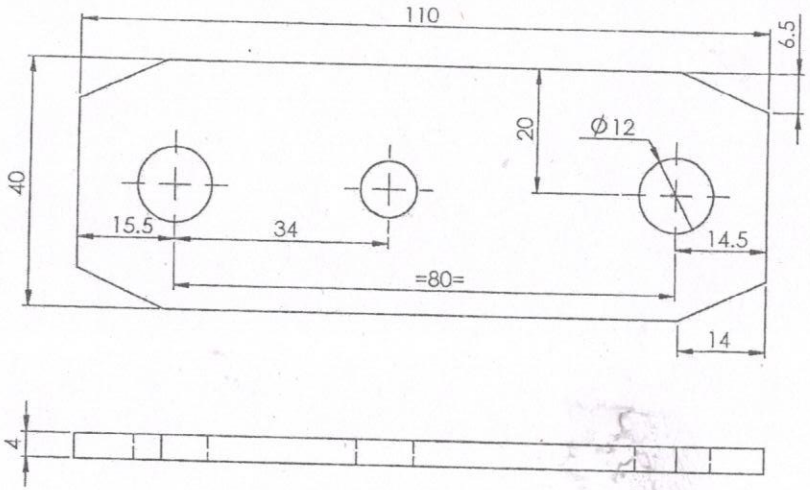

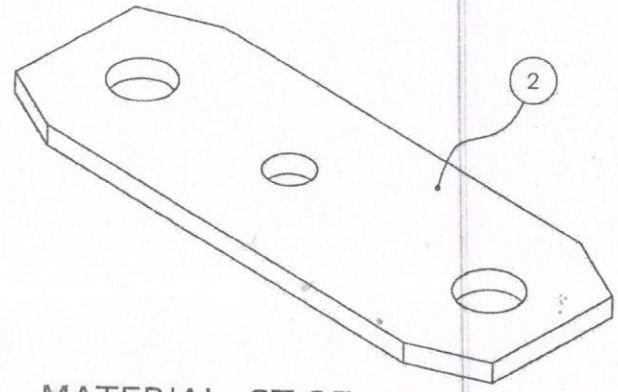

MATERIAL: ST-37
QTY:4

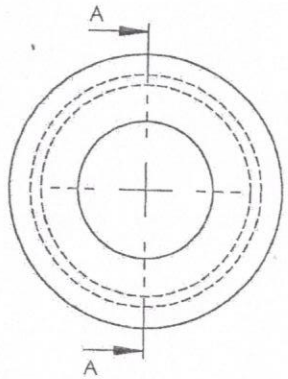

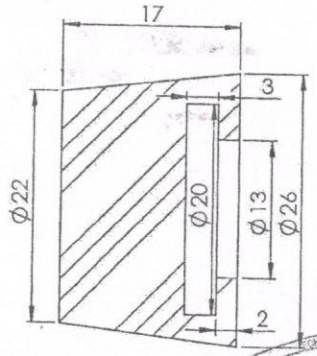

SECTION A-A

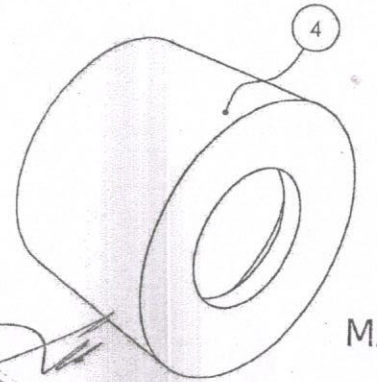

MATERIAL: NR(Natural Rubber)
QTY:2

Dimension Without Tolerance Specification According To Din 7168

GOST / DIN	1	2	3	4	5	6	7	9
Ra	100	40	20	10	5	2.5	1.75	0.32
Rz	630	160	80	40	20	10	6.3	1.6

AZARBAYJAN STEEL CO

REV	DESCRIPTION	DATE	NAME
01	...	...	...
02	...	...	...
03	...	...	...
04	...	...	...

	DATE	NAME
DRAWN	1402-07-15	Mostafavi
CHECKED1	1402-07-15	Kazemi
CHECKED2	1402-07-15	Toluei
APPROVED	1402-07-15	NurAlizadeh
AS.BUILT	...	
POS	...	
AS.NUMBER	SM48D31M6301001	
PRODUCT	...	

SCALE: 2:1.5 | WEIGHT: KG
MATERIAL: ...
TITLE: Cable Trolley
DRAW NUMBER: N_450845.Y
HEAT TREATMENT : .. HRC
SHEET: 3.5 | PART : 2-4
SIZE: A3
REV: 01

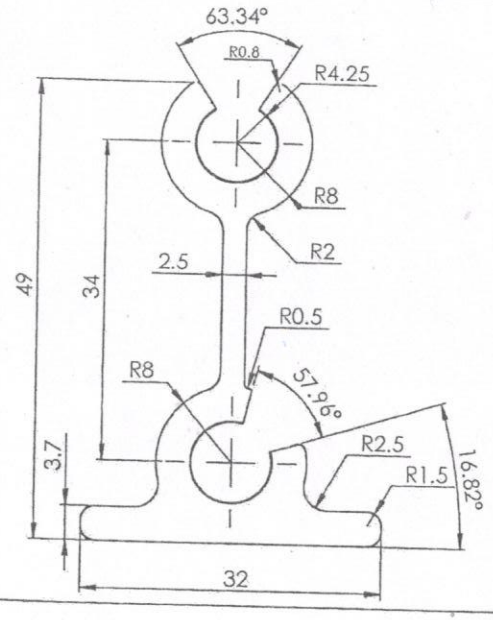

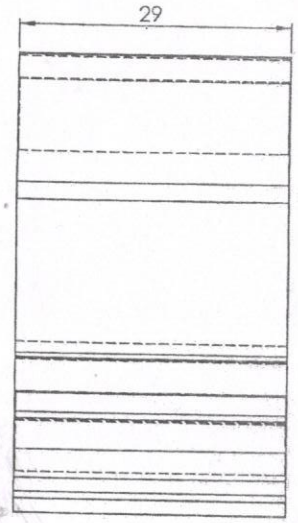

MATERIAL: ALUMINIUM 2000
QTY:4

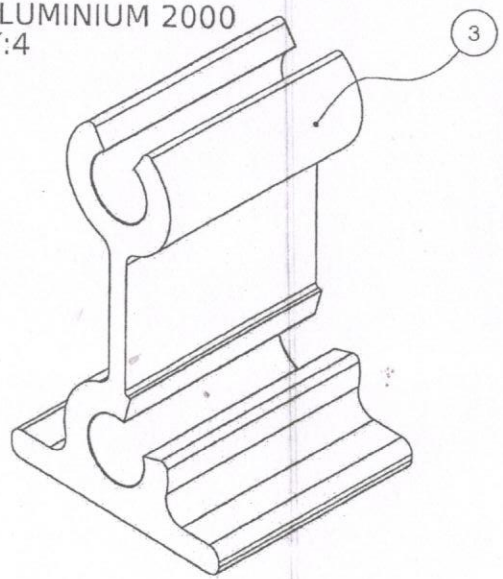

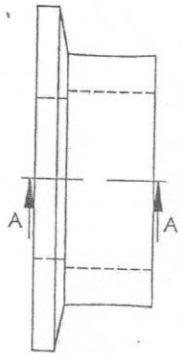

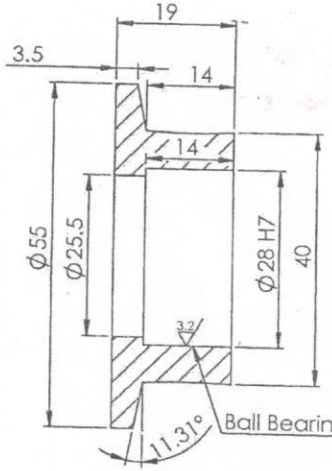

Ball Bearing:NO: 6001

SECTION A-A
SCALE 2 : 1.5

MATERIAL: Mo40
HEAT TREATMENT:48-50 HRC

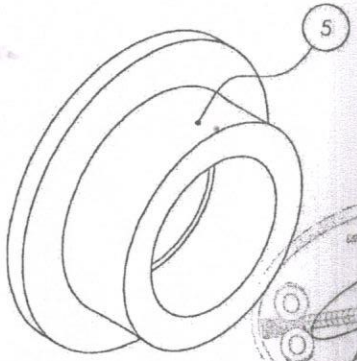

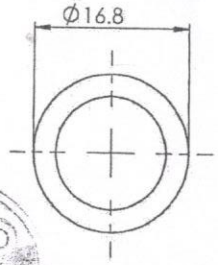

MATERIAL: Mo40
QTY:4

Dimension Without Tolerance Specification According To Din 7168

GOST DIN		2	3	4	5	6	7	9
		6.3	3.2	1.6	1.6	1.6	0.8	0.2
Ra	100	40	20	10	5	2.5	1.25	0.32
Rz	630	160	80	40	20	10	6.3	1.6

AZARBAYJAN STEEL CO

REV	DESCRIPTION	DATE	NAME
01	---	1402/..../..	---
02	---	---	---
03	---	---	---
04	---	---	---

	DATE	NAME
DRAWN	1402-07-15	Mostafavi
CHECKED1	1402-07-15	Kazemi
CHECKED2	1402-07-15	Toluei
APPROVED	1402-07-15	NurAlizadeh
AS.BUILT	---	
POS	---	
AS.NUMBER	SM4BD31M6301001	
PRODUCT	---	

SCALE: 2:1.5 | WEIGHT: KG
MATERIAL: ...
TITLE: Cable Trolley
DRAW NUMBER: N_450845.Y
HEAT TREATMENT : .. HRC
SHEET: 4.5 | PART : 3-5
SIZE: A3
REV: 01

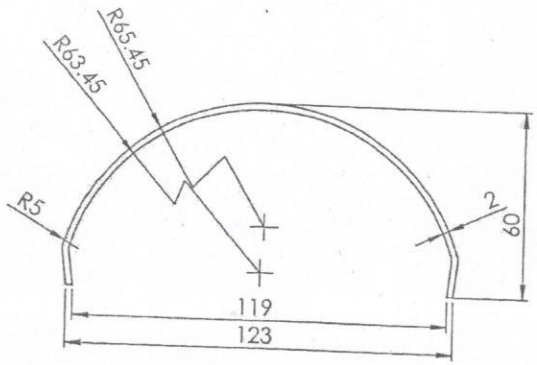

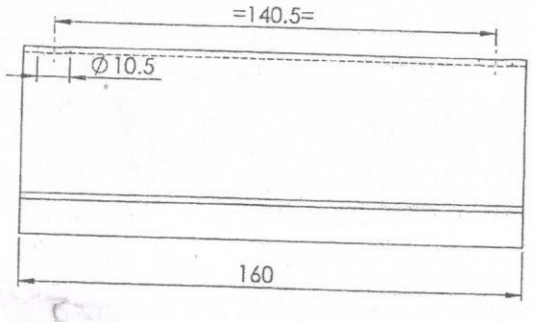

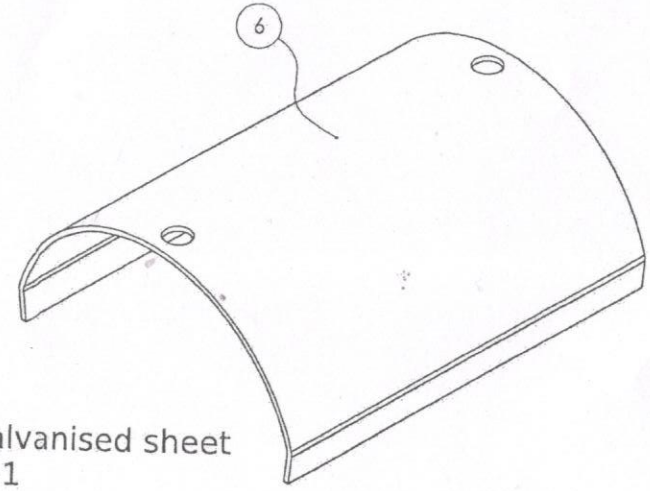

MATERIAL: galvanised sheet
QTY:1

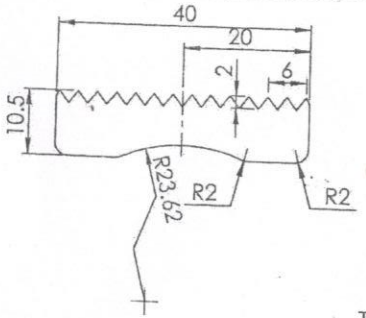

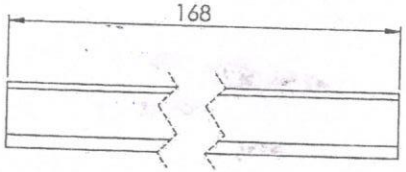

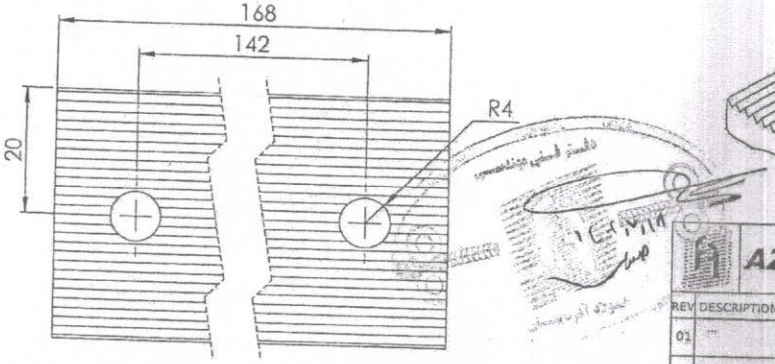

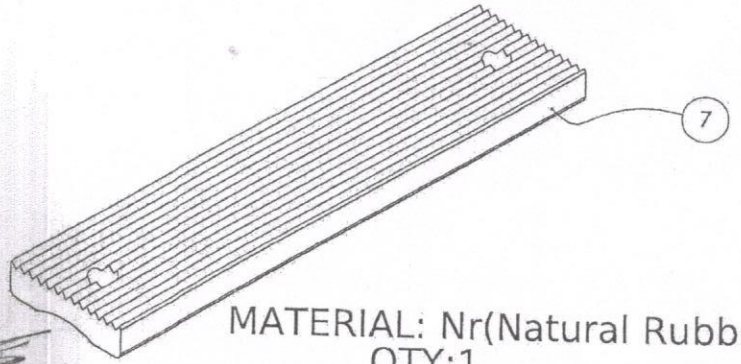

MATERIAL: Nr(Natural Rubber)
QTY:1

Dimension Without Tolerance Specification According To Din 7168

GOST / DIN	2	3	4	5	6	7	9
Ra	100	40	20	10	5	2.5	1.25	0.32
Rz	630	160	80	40	20	10	6.3	1.6

REV	DESCRIPTION	DATE	NAME
01	...	...	...
02	...	...	...
03	...	...	...
04	...	...	...

AZARBAYJAN STEEL CO

	DATE	NAME
DRAWN	1402-07-15	Mostafavi
CHECKED1	1402-07-15	Kazemi
CHECKED2	1402-07-15	Toluei
APPROVED	1402-07-15	NurAlizadeh
AS.BUILT	--	
POS	--	
AS.NUMBER	SM4BD31M6301001	
PRODUCT	--	

SCALE: 1:1.5 | WEIGHT: KG

MATERIAL: ...

TITLE: Cable Trolley

DRAW NUMBER: N_450845.Y

HEAT TREATMENT : .. HRC

SHEET: 5.5 | PART : 6-7

SIZE: A3

REV: 01