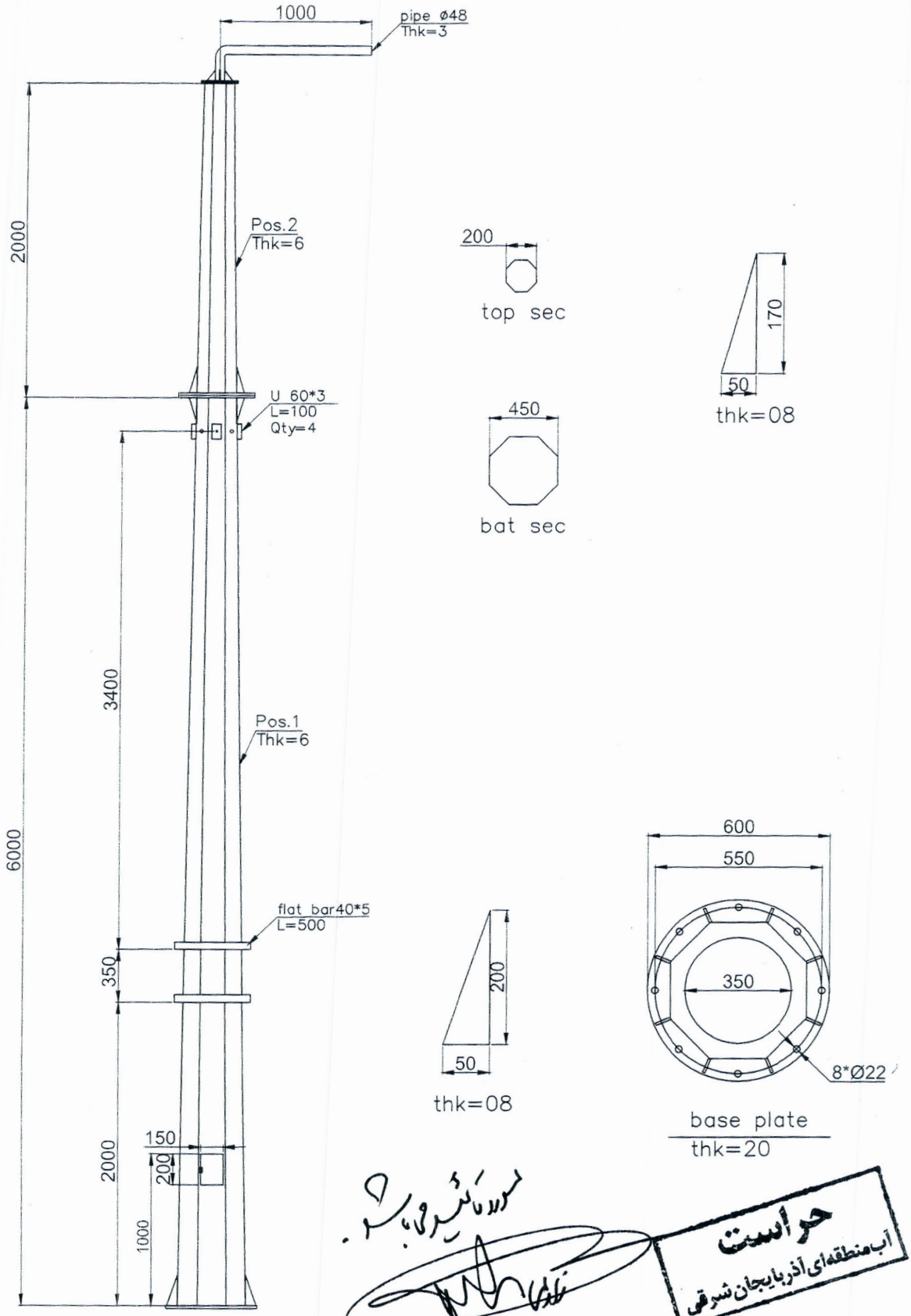

حراست
آب منطقه‌ای آذربایجان شرقی

No.	Description	Qty	Material	Standard	T. Weight (Kg)	Part No.
		Number of Total :				

		Name
Designer		SHAYAN BARGH
Drawn		
Checked		
Date		

Name:

LED DISPLAY BOARD

SHAYAN BARGH.CO
LED DISPLAY
&
MANUFACTURE
CITY DECORATIVE LIGHTING

Drawing Nr.

Sheet 1